MANDÍK

TPM 123/16
Version 2026-10-16

VBM-V

Combined inlet and outlet ventilation box

Technical Documentation
Installation, Commissioning, Operation, Maintenance and Service Manual

MANDÍK®
www.mandik.com

MANDÍK, a.s. • Dobříšská 550 • 267 24 Hostomice • Czech Republic • Tel.: +420 311 706 742 • E-Mail: mandik@mandik.cz

These technical conditions will specify produced sizes and solution of the "Ventilating VBM-V box".
This applies to production, design, ordering, supplies, assembly, operation and maintenance.

CONTENTS

GENERAL **3**
Description 3
Construction 3
Size and weight 4
Installation and placement 5
TECHNICAL DATA **6**
Basic parameters 6
Electric elements, connection diagram 6
Pressure losses 9
Noise data 9
MATERIAL, SURFACE ADJUSTMENT **10**
Material 10
CHECKS, TESTING **10**
Checks 10
Testing 11
PACKING, TRANSPORT, TAKEOVER, STORAGE, WARRANTY **11**
Logistics data 11
Warranty 11
ASSEMBLY, PERSONNEL, MAINTENANCE AND SERVICEABILITY CHECK **11**
Assembly and connection 11
Maintenance 11
Serviceability 11
ORDER DATA **12**
Order specification 12

GENERAL

Description

Combined inlet and outlet ventilation VBM-V box is designed to be used in the DCV (demand controlled ventilation) air-conditioning systems with the possibility of regulation of the inlet and outlet air volume on the basis of actual need of ventilation in a ventilated space of industrial or residential buildings.

This VBM-V box may be used for flats, hotel apartments, offices, etc. In the box, there are integrated air flow controls, which are equipped with noise attenuators on the inlet and outlet side. Box is designed to be mounted into the wall or ceiling. On the box shell, there are integrated rails mounted. The entire box is electrically connected and pre-set in the factory. This ventilation box may be placed into a furniture case of 600mm size. Each ventilation box may be controlled by a separate remote control. In the box, there is a power supply and control unit installed for the air flow control with a flexible connection with euro type plug designed for the sockets of general electric circuits, 1x230V/50Hz.

External remote control for a concealed assembly is led through bushing in the outer box shell into the control unit.

Boxes are designed for the environment protected against climate effects within the air temperatures range from -15°C to +45°C and within the relative air humidity range max. up to 95% (condensation on the box top or in the internal box components has to be avoided). Air driven by exhaust has to be free of any abrasive, chemical and sticky additives.

Unless states otherwise, all the sizes are in mm and weights in kg.

VBM-V box view from the operational side

VBM-V box view with open operating board

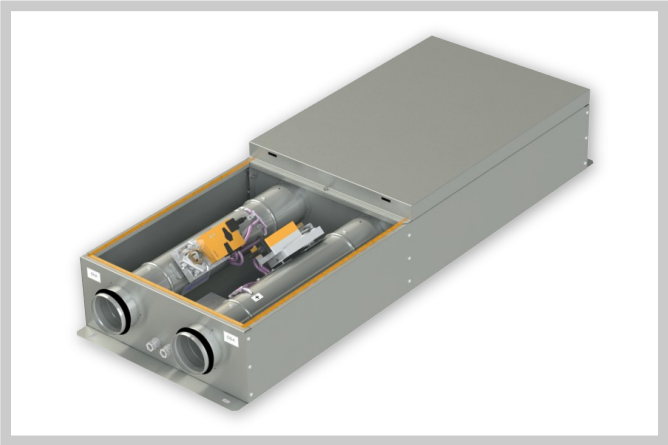

Construction

Box construction differs according to the order specification.
Ventilation box construction differs according to the side, air inlet part on the neck for SUP fresh ventilation air inlet into the box - LEFT ("L" code) or RIGHT ("P" code). Another element making difference is the flow rate size of the unit and control unit type.

Right box construction - "R" code

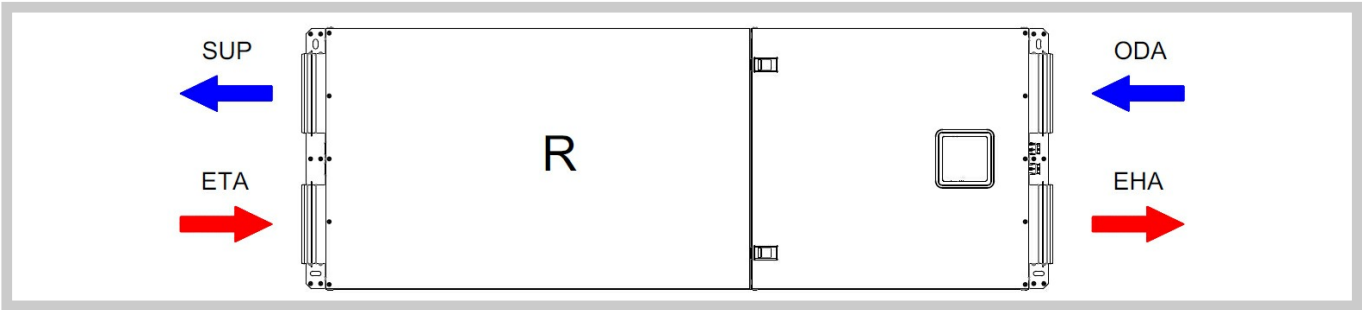

Left box construction - "L" code

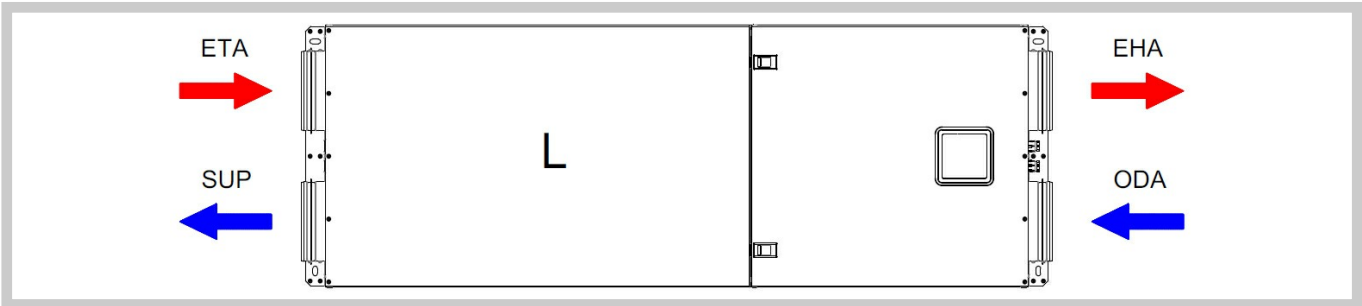

ODA - fresh air from the central ventilation unit
ETA - exhaust air from ventilated space
SUP - air inlet from the box into the ventilated space
EHA - waste air from the box to the central vent. unit

Size and weight

Box size VBM-V (mm)

Type	A	A1	A2	A3	B	B1	C	D	E	L
VBM-V 100	480	120	240	392	220	100	552	98	44	1250
VBM-V 125	480	120	240	392	220	100	552	123	44	1250
VBM-V 160	520	130	260	456	245	107	552	158	32	1400

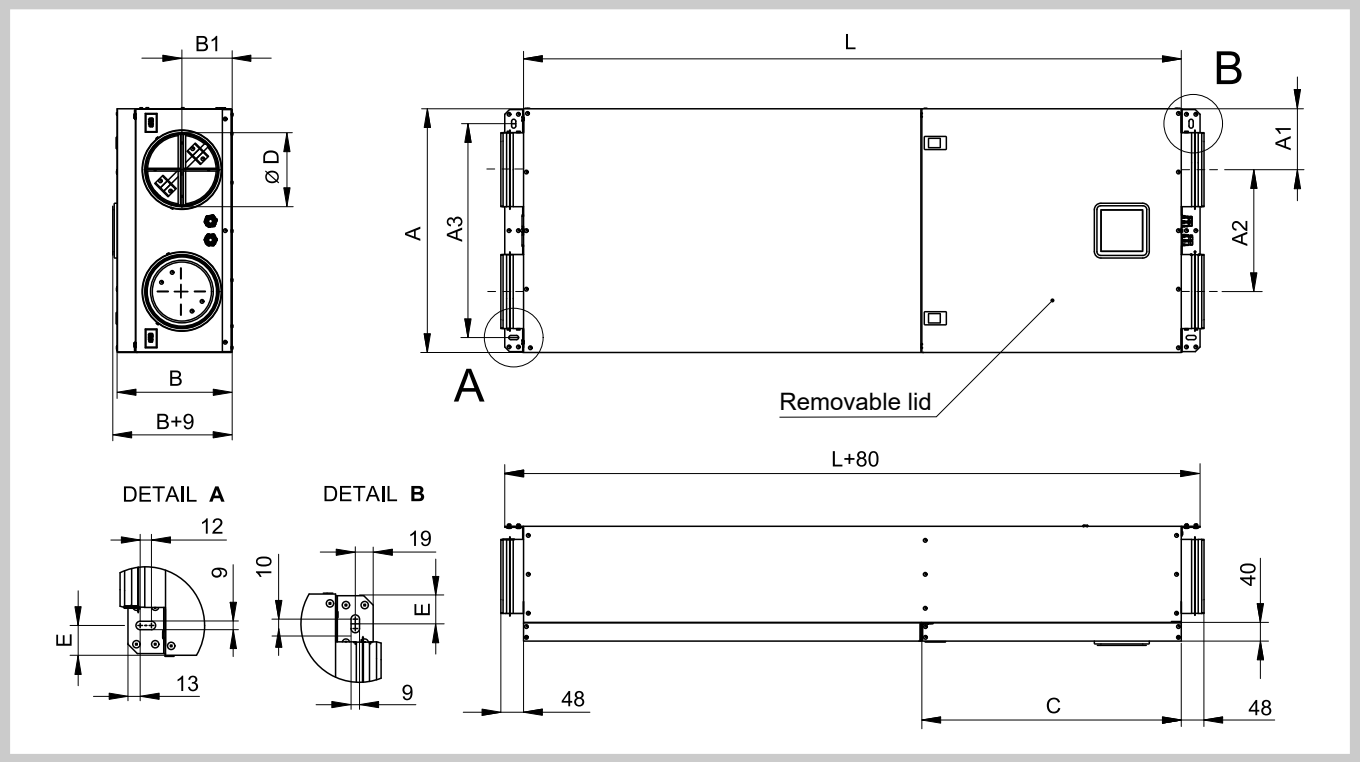

VBM-V boxes weight

Type	Weight (kg)
VBM-V 100	24
VBM-V 125	26
VBM-V 160	31

Installation and placement

Box is designed for its installation into the wall or ceiling. On its shell, there are supporting rails mounted. Box is fixed to the wall by using 4 oval openings in the bearing rails. It is necessary to use appropriate type of fixing screws (recommended M8 screw size) and anchors with load corresponding to the box weight.

Ceiling installation should be always performed by a removable lid in a downward direction, i.e. to the floor. Vertical wall fixing is possible in the direction of air inlet flow (SUP) from the bottom to the top or in the direction of air inlet flow (SUP) for the top to the bottom.

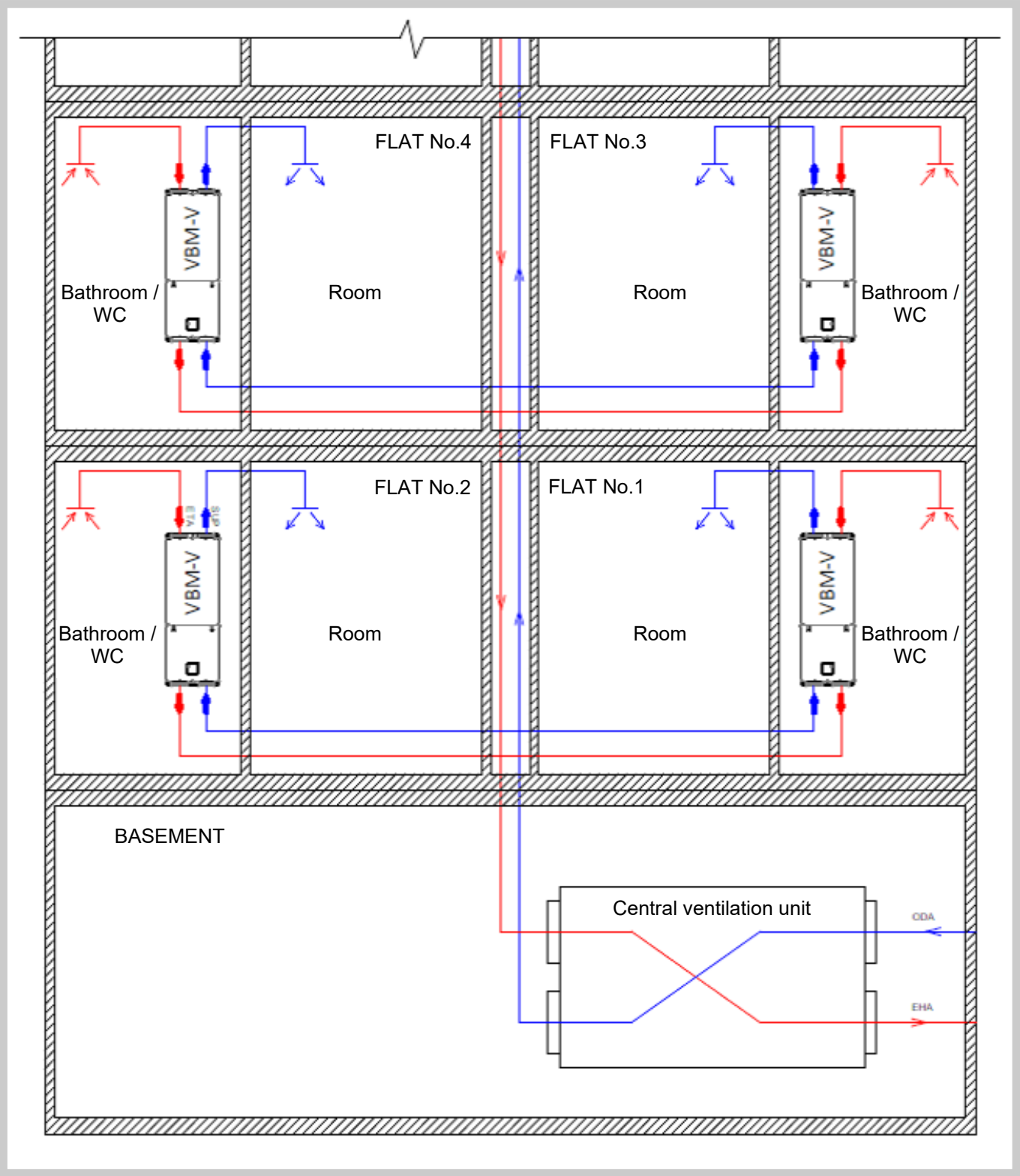

Example of the VBM-V boxes, connected within the system of controlled flat air conditioning - principle diagram

TECHNICAL DATA

Basic parameters

Air flow rate through the VBM-V boxes

Type	Vmin (m³/h)	Vmax (m³/h)
VBM-V 100	30	140
VBM-V 125	60	190
VBM-V 160	80	320

Electric elements, connection diagram

REG 1 control - microprocessor controller with touch panel and proportional control

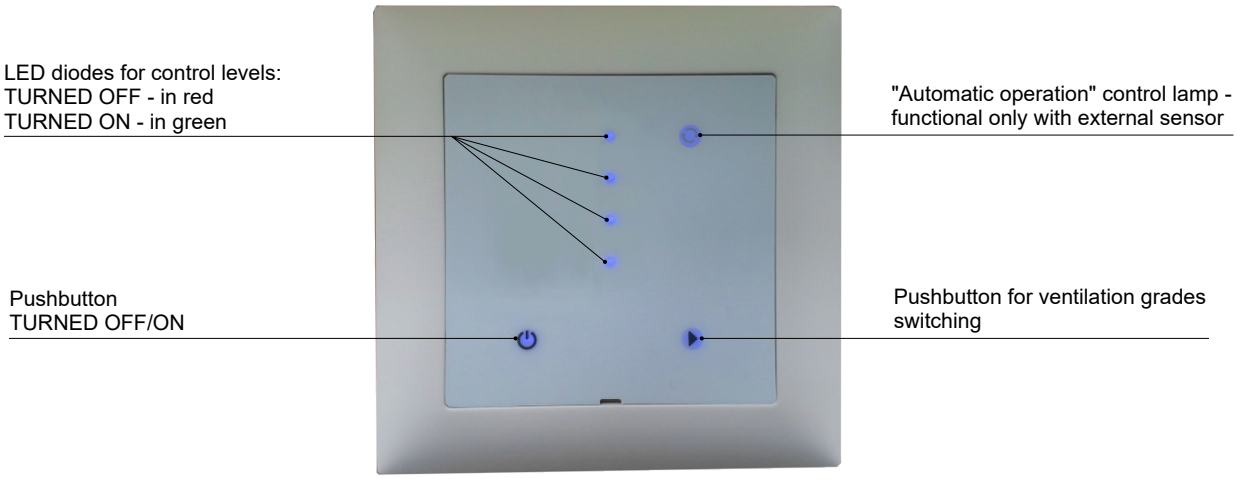

- Operational voltage 24V AC/DC, 50/60Hz, max. 1,0VA
- Analog input 0...10V DC
- Analog output0...10V DC
- Temperature scale for operation 0-50°C, r.v.<95%, environment without condensing risks
- Cover: IP40 - after wall installation, IP00 before wall installation
- Manual control of ventilation intensity in four grades: TURNED OFF-MIN/1.GRADE/2.GRADE/MAX
- Setting of ventilation intensities for respective grades is within the range of 0...10V (MIN=2V, 1.GRADE=4V, 2.GRADE=6V, MAX=10V)
- Remote control is pre-set from the factory. Different requirements for setting grades of the remote control should be specified when making the order
- Automatic switching from the MAX mode to the 2. GRADE after 120min
- Designed for installation box, recommended height of assembly box from the floor is ca 1.5m
- Remote space control may be reconfigured into different parameters by using an external maintenance device (maintenance device is not included in this supply)

Setting the turned off mode by using the JP1 terminal in the bottom part of remote control:

JP1 in the 1+2 position - turned off mode without voltage (closed)

JP1 in the 2+3 position - turned off mode ventilating in minutes air flow (MIN)

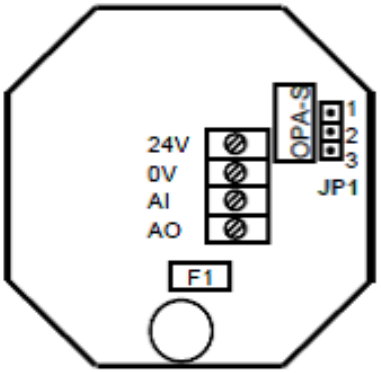

Diagram of REG 1 controller connection to the VBM-V box

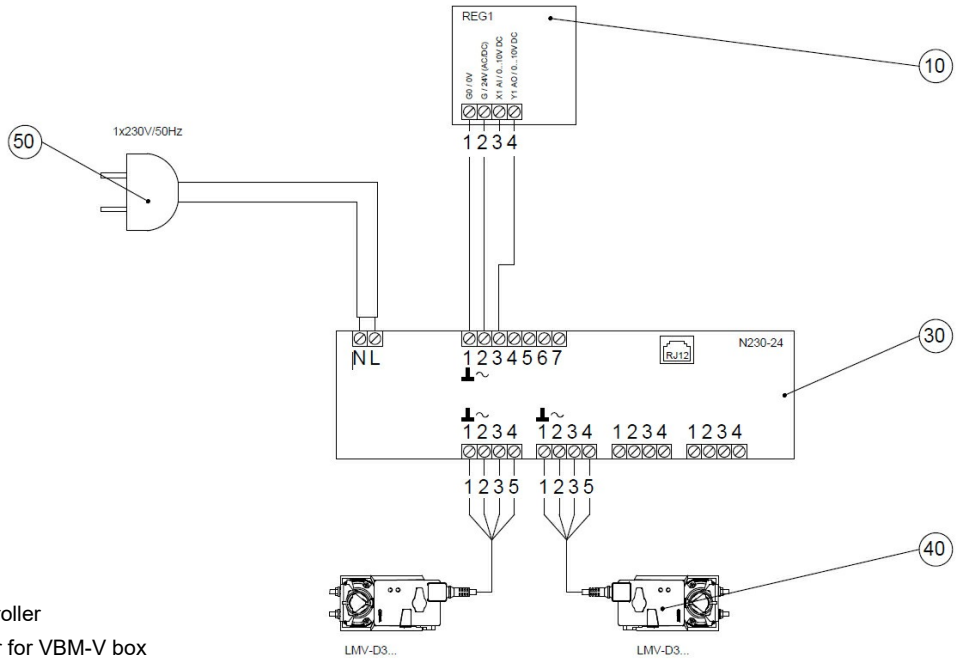

Legend:

10 – REG 1 space controller

30 – N230-24 connector for VBM-V box

40 – servo drive for LMV-D3 air flow controller

50 – connecting cable of the supply voltage 1x230V/50Hz with EURO plug

REG 2 controller - microprocessor controller with touchscreen and time program selection possibility

Indication of ventilation grade

Type of operation:
PARTY / AUTO / MANUAL OPERATION

Pushbutton activates silenced operation (without persons)
Further pushbutton functions:
ESC
BACK IN MENU
CANCEL THE CHANGED VALUE

Time program:
Short push: activates time program.
Long push: longer than 2s: setting the time and mode within interval.

Large digital numbers:
Real-time clock

Up button: Increases the set value (in settings menu it increases the parameter value)

Down button: Decreases the set value (in settings menu it decreases the parameter value)

Small digital numbers:
Ventilation grade indicator

Right button: Activates the PARTY operation: Outlet will be fully open. (Program function: to select the menu item, accepting changed value)

- Operational voltage 24V AC/DC, 50/60Hz, max. 1.5VA.
- Analog input 0...10V DC
- Analog output 0...10V DC.
- Operational temperature range 0-50°C, r.v.<95%, environment without condensing risk.
- Cover: IP30 - after wall installation, IP00 before wall installation.
- Touchscreen with blue backlight.
- Time schedule for each weekday.
- Party mode activation with the possibility of its automatic turnoff after pre-set time (set for 10min).
- Non-presence mode with optional ventilation intensity and time of operation.
- Optional ventilation grades (5 grades)
- Change of setting parameters, protected by password.
- Designed for mounting into an installation box, recommended installation box position (height) from the floor is ca 1.5m.

Time schedule

Blinking clock symbol means that the time was not set or the remote control was not used for more than 48 hours.

Time setting procedure:

The CLOCK button should be pushed for more than 2 sec → **SEL** will be displayed and the actual time and day (SEL 00:00 DAY1 (Mon)) **RIGHT BUTTON** should be pushed shortly → minutes will start blinking → by using the **UP and DOWN BUTTON**, the actual time can be set → confirm by **RIGHT BUTTON** → clock will start blinking, which should be set in the same manner as minutes and confirmed by the **RIGHT BUTTON** → DAY1 will start blinking and the weekday may be set in the same manner as the hour → push **RIGHT BUTTON** and confirm settings of the actual time and day.

Abbreviations for weekdays:

DAY1 - Monday, DAY2 - Tuesday, DAY 3 - Wednesday, DAY4 - Thursday, DAY5 - Friday, DAY6 - Saturday, DAY7 - Sunday.

Time schedule activation / deactivation:

CLOCK button should be pushed for a shorter time than 2s.

Time schedule settings:

CLOCK button should be pushed for longer than 2 sec → SEL will be shown and the actual time → **UP BUTTON** and select PRO → confirm by **RIGHT BUTTON** → select ON or OFF (turn time schedule off or on) → select ON → push **UP BUTTON** → large digits on the display will show PR01, small digits will show the beginning of the first time interval → push **RIGHT BUTTON** and the time 00:00 will start blinking, set the time then by **UP and DOWN BUTTON** → confirm by **RIGHT BUTTON** → DAY1 for weekday selection will start blinking → select the weekday by **RIGHT BUTTON** → confirm by **RIGHT BUTTON**. Then by using the **UP and DOWN BUTTON**, select and set the requested value → confirm by **RIGHT BUTTON**.

Standardly, following time schedule is set:

Monday - Sunday:

Pr01: 07:00 50%
Pr02: 17:00 100%
Pr03: 22:00 25%

Space controller may be pre-programmed for the user by request in the factory e.g. the number of ventilation stages, ventilation intensity settings in grades or percentage, setting the time for PARTY mode turn off, setting the grades for 2...10V DC, etc.). WITHIN STANDARD SETTINGS, 8 TIME SCHEDULES MAY BE SET (PR01. . . PR08)

Diagram for REG 2 controller connection to the VBM-V box

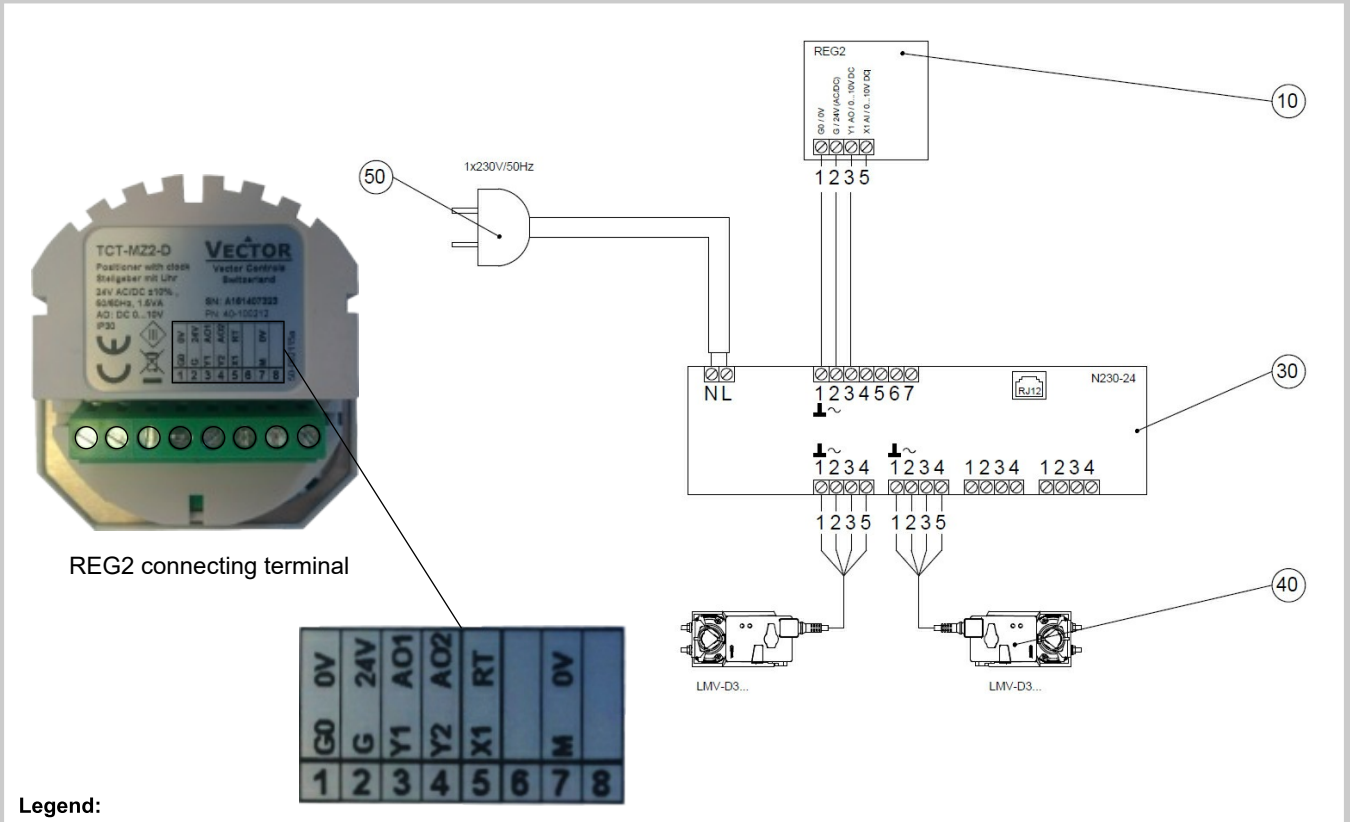

Legend:

10 – REG2 Space control

30 – N230-24 connecting unit for the VBM-V box

40 – servo drive for LMV-D3 air flow controller

50 – connecting cable of the supply voltage 1x230V/50Hz with EURO plug

Pressure losses

Pressure loss of the VBM-V box is specified for the case of a fully open controller sheet

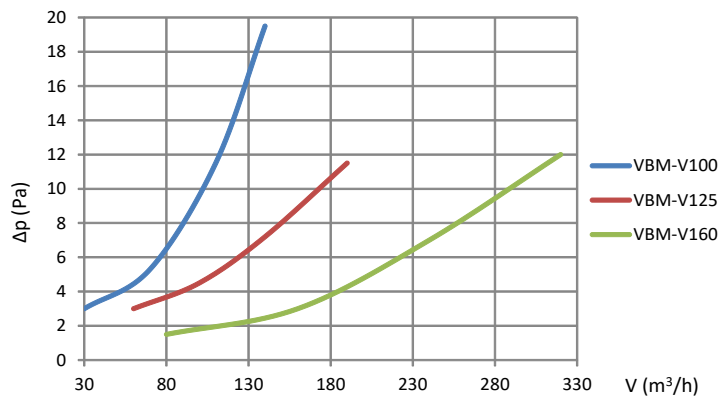

Noise data

Sound power level of the box radiated to the pipe

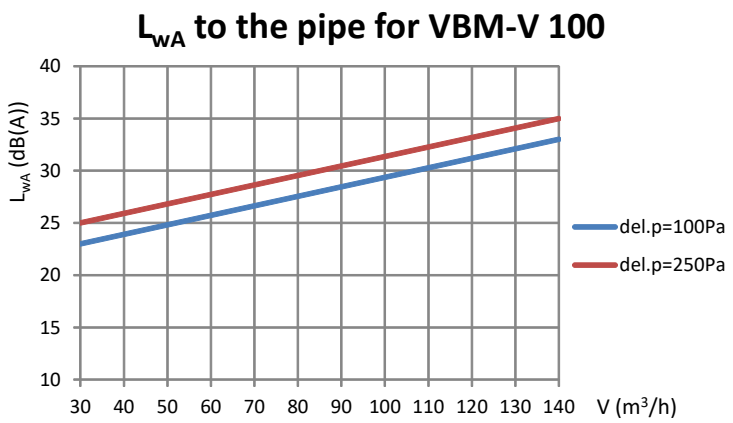

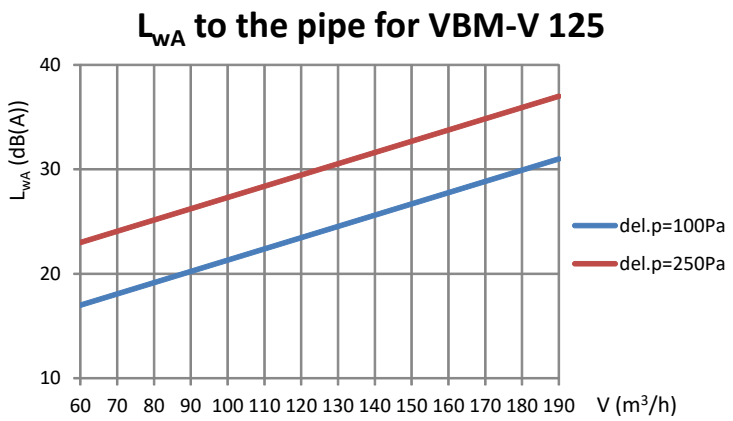

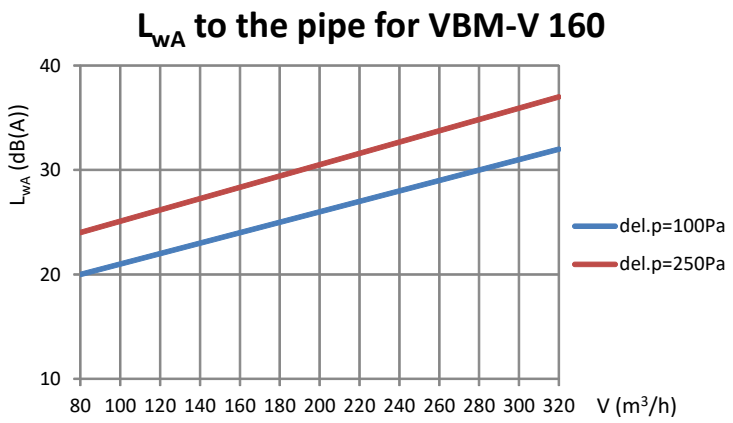

Sound power level of the box radiated to the surrounding area

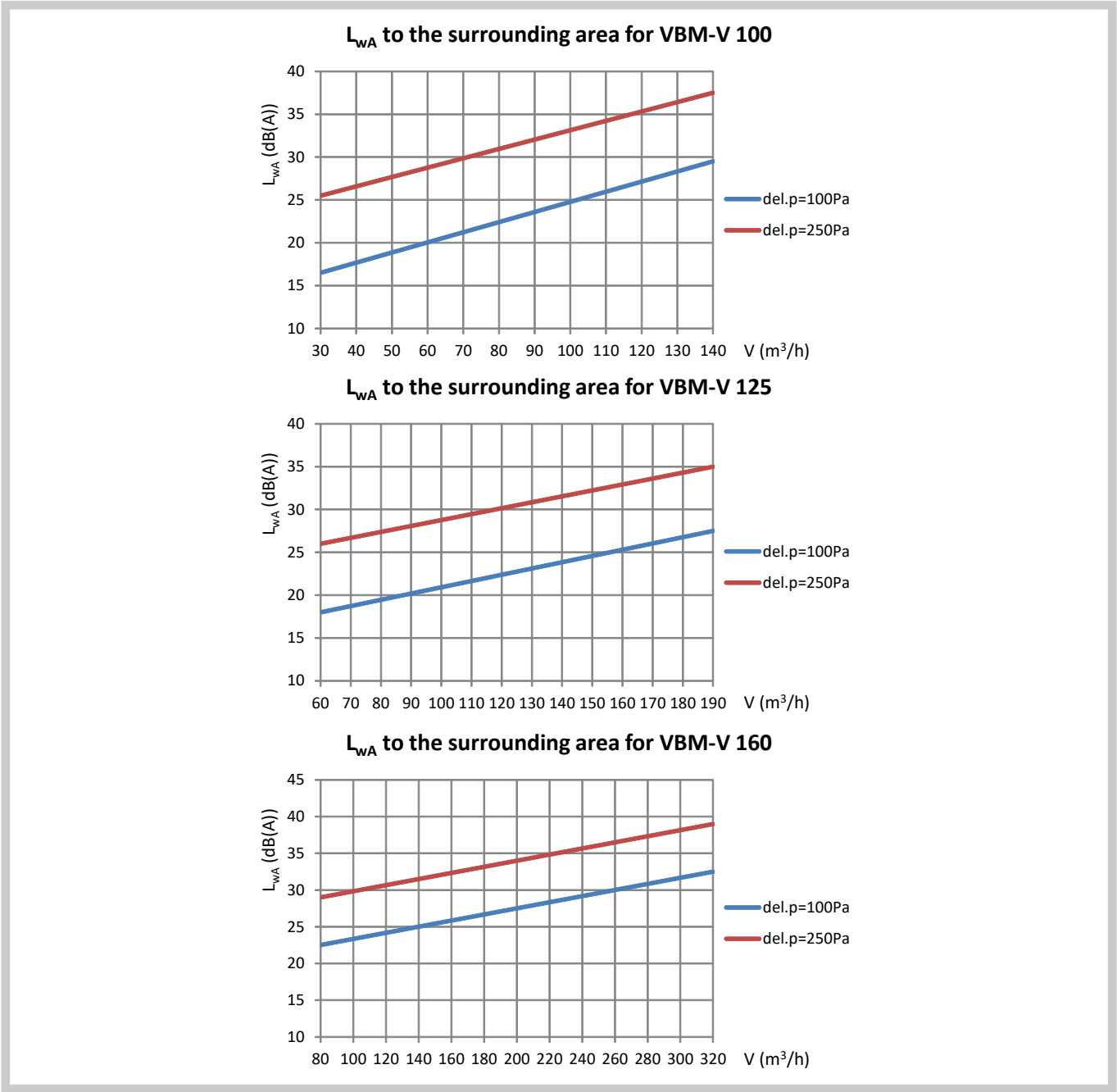

Noise attenuation in the direction from ODA→SUP and from EHA→ETA

Type	f (Hz)	63	125	250	500	1000	2000	4000	8000
VBM-V – 100, 125	D (dB)	12	13	20	18	17	14	6	4
VBM-V – 160	D (dB)	12	11	20	19	20	19	11	6

MATERIAL, SURFACE ADJUSTMENT

Material

Shell of the VBM-V ventilation box is made of steel zinc plates. Box is equipped by flanged with edge rubber sealing. Flow rate controllers' shells and valve dampers are made of zinc plates. Pins of the dampers are made of galvanized steel. Controller damper is equipped by a silicone sealing. Bearing pipe of the noise attenuator is made of a perforated aluminium plate and insulation material of the attenuator is made of rock wool and shell from a polyester foil.

CHECKS, TESTING

Checks

After the final assembly is complete, an output quality control of the ventilation box will be executed, where the final conformity is tested with the requirements in the order.

Testing

A procedure for setting the min. and max. air flow depending on the ventilation box size will be performed.
Functional test by connecting the external REG1 and REG2 controllers will not be performed for the ventilation box.
Controllers are packed separately.

PACKING, TRANSPORT, TAKEOVER, STORAGE, WARRANTY

Logistics data

Boxes are packed separately in a stretch foil. They are transported in a freely laid position and covered by appropriate transportation instruments. After the agreement with customer, boxes could be transported on paletts. In case of manipulation, the boxes have to be protected against any mechanical damage for the transportation and storage period. In case the takeover is not specified in the order, box handover to the transporter is considered as the takeover. Boxes should be stored in covered buildings, in an environment free of aggressive vapours, gases and dust. There should be a temperature from -15°C to +45°C kept for storage with maximum relative humidity up to 85%. Any humidity condensation has to be avoided on the inner part of the box packing.

Warranty

Producer provides a warranty of 24 months for the box from the date of its shipment. Such warranty will not apply in case of box use for any other purpose, equipment and working conditions as allowed by this standard or in case of damage during manipulation therewith. In case of damage during transportation, it is necessary to prepare a report during the takeover for potential complain later.

ASSEMBLY, PERSONNEL, MAINTENANCE AND SERVICEABILITY CHECK

Assembly and connection

Box assembly should be performed in accordance with the rules specified in the GENERAL chapter and in the TECHNICAL DATA chapter. After the box is assembled and control units are connected to power supply according to the diagrams in the TECHNICAL DATA chapter, no other connection is necessary. Box will become fully functional after the connection to the power supply voltage of 1x230V/50Hz.

Maintenance

Ventilation box do not need any maintenance. We recommend disassembly and cleaning of inner spaces of air flow controllers 1x per 2 years.

Air flow controllers disassembly is possible after the disassembly of the inner supporting sleeves in the box and disassembly of the dividing wall.

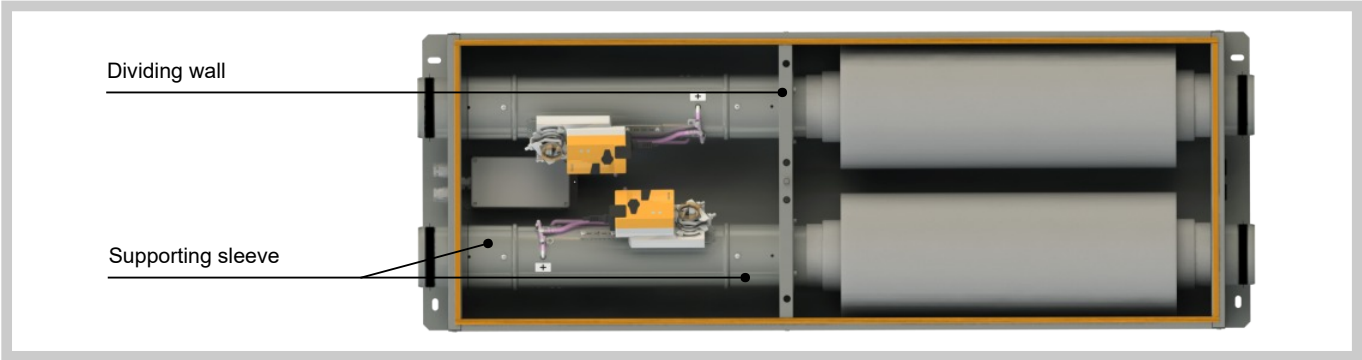

Serviceability

This ventilation box is not a subject of any mandatory serviceability checks.

ORDER DATA

Order specification

1	2	3	4
VBM-V	DN 125	P	REG1

EXAMPLE:
VBM-V DN 125 P REG1
Ventilation box VBM-V, dimension DN 125 mm, right box design, with 4-grade control without time schedule.

1| Ventilation box type - VBM-V

2| Box dimensions øD → see page 4

3| Box design

P	Right
L	Left

4| Type of the used space controller

REG0	Without space controller
REG1	4-grade control without time schedule
REG2	continual control with the possibility of a time schedule

The producer reserves the right for innovations of the product.
For actual product information see www.mandik.com

MANDÍK®

www.mandik.com

MANDÍK, a.s. • Dobříšská 550 • 267 24 Hostomice • Czech Republic • Tel.: +420 311 706 742 • E-Mail: mandik@mandik.cz