MANDÍK

TPM 150/21
Version 2026-10-15

RDM

Multi blade regulation/adjustment damper

Technical Documentation
Installation, Commissioning, Operation, Maintenance and Service Manual

MANDÍK®
www.mandik.com

MANDÍK, a.s. • Dobříšská 550 • 267 24 Hostomice • Czech Republic • Tel.: +420 311 706 742 • E-Mail: mandik@mandik.cz

These Technical Specifications define the range of the manufactured sizes and design of "Multi blade regulation damper RDM (hereinafter referred also shortly as the "dampers")
These technical Specifications apply to the manufacture, design, ordering, assembly, operation and maintenance.

I. CONTENT

II. GENERAL INFORMATION **3**

1. Description..... 3

2. Design..... 4

3. Basic range, dimensions, weights..... 5

III. TECHNICAL DATA **7**

4. Basic parameters..... 7

5. Flow characteristic, pressure drop, tightness..... 8

6. Noise data..... 10

7. Electrical elements, wiring diagram..... 11

IV. MATERIAL, FINISHING **18**

8. Material..... 18

V. INSPECTION, TESTING **18**

9. Inspection..... 18

10. Testing..... 18

VI. PACKING, TRANSPORT AND STORAGE **18**

11. Logistic terms..... 18

VII. ORDERING INFORMATION **19**

12. Ordering key..... 19

II. GENERAL INFORMATION

1. Description

1.1. Multi blade regulation dampers RDM (hereinafter referred also shortely as the "dampers") are intended to be used in buildings – in heating, ventilation and air-conditioning (HVAC) systems. Controlled changes of the damper effective cross-section allow to adjust the air flow rate.

The dampers consist of a rectangular steel body (frame), set of steel counter-running blades closed from the both sides by sealing end-cups from a composite material based on polyamide with suppressed flammability V-0 in accordance with UL 94 (halogen-free), blade shaft from steel with composite plain bearings (or stainless-steel plain bearings, on demand), steel rod mechanism, and from a manual control, or from actuator control (with actuator), or the dumper is just ready for actuator mounting (without actuator), respectively.

The dampers are characterized by:

- effort-less, smooth, silent running
- rigid blades with good aerodynamics
- two blade sizes to guarantee optimum filling of the cross-section
- silicone-free design
- wide application range

Fig. 1 Basic dimensions of the damper

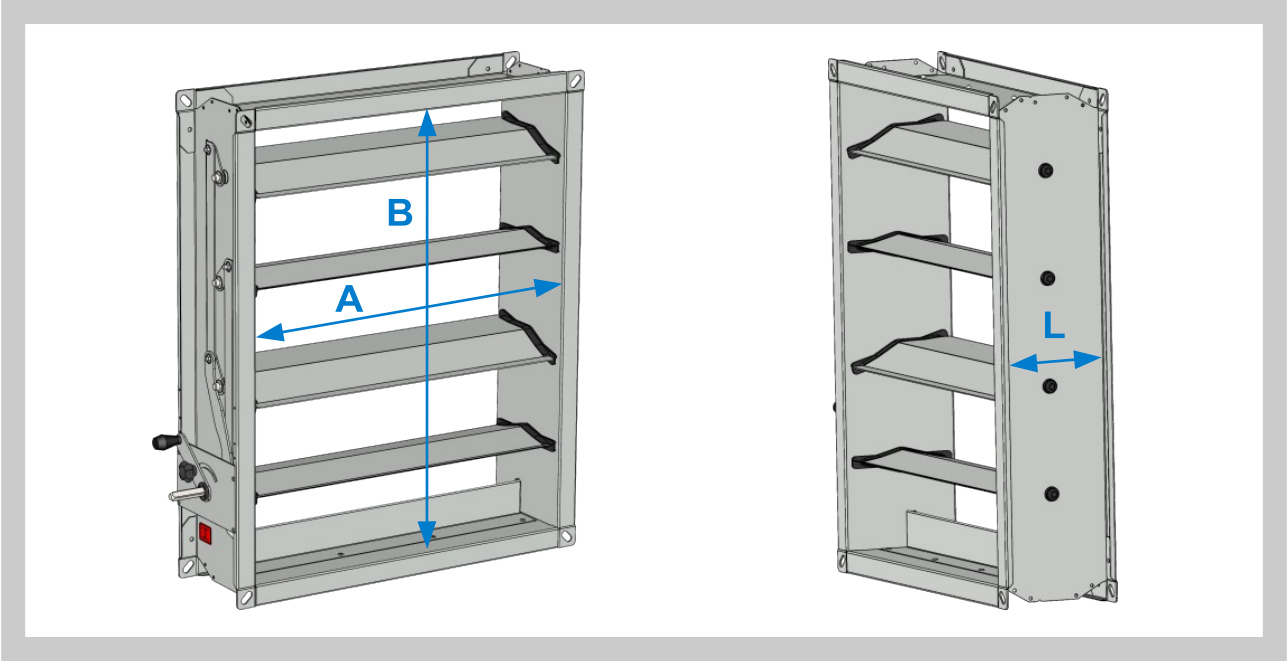

1.2. Damper characteristics

• Nominal dimensions A x B:	200 x 200 … 2000 x 2000 mm by 5 mm
• Flange:	30 mm
• Body length L:	160 mm
• Tightness in acc. with EN 1751:	Casing leakage class ATC 3 (old marking “C“)
• Volume air flow rates:	up to 172 800 m^3/h
• Mean air velocity in the duct:	max. 12 m/s
• Maximum allowed pressure in the duct:	± 1 500 Pa
• Maximum pressure difference:	1 000 … 1 500 Pa
• Reaction to fire - body (frame), blades, mechanics:	class A1

Fig. 2 Damper design elements

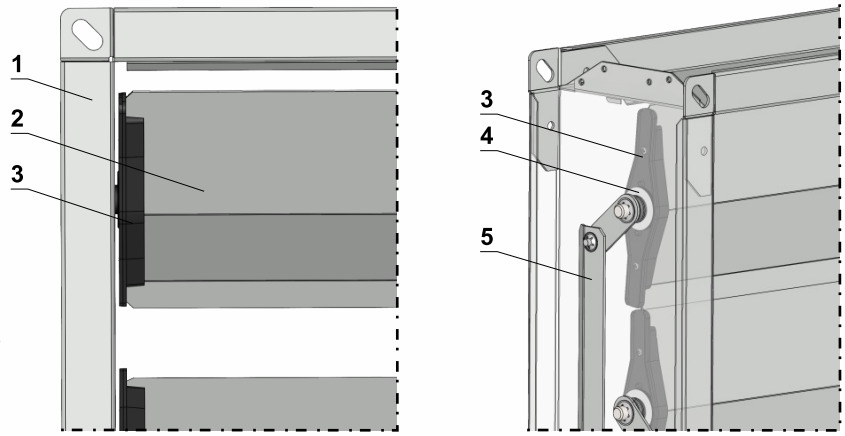

Position:

1 Steel body (frame)
2 Steel aerodynamic blade
3 Composite end-cup of V-0 class in acc. with UL-94, halogen free
4 End-cup sliding gasket
5 Rod mechanism

1.3. Operation conditions

To guarantee reliable functioning of the damper, the following conditions shall be respected:

a) horizontal or vertical blade direction[1] and
b) mean air velocity in the duct max. 12 m/s, and
c) operation overpressure or vacuum in the duct max. 1500 Pa, and
d) control pressure drop, difference of the static pressure in the sections before and after the damper in acc with chapter 4.1.
e) mild climate 3K5 in accordance with EN 60721-3-3+A2, without condensation, frost, ice formation, without water from other sources than the rain, and
f) environment witout abrasive, adhesive, electro-charged, chemically active and radioactive solid or liquid particles, without radioactive gases[2] and
g) operation teplerature of -20°C … +70°C, while
h) in case of the damper equipped with and actuator or other electric devices is the the allowed temperature range limited in accordance with with the temperature range of such devices
i) the flange of the duct where the damper is assembled shall be in plane; otherwise, negative impact on the tightness or even risk of damage of the damper during closing. The damper shall be fixed to the duct flange at least from one side. This aplies also when adjusting the actuator.
j) for actuator(s) mounted outside the Factory, the end blocks (stoppers) of the actuator(s) are setup correctly to prevent a mechanical damage of the damper.

1] Damper with horizontal blade axis needs less torque and will show slower wear.
2] With respect to the selected material option and/or surface protection treatment; individual demands may be discussed case by case.

2. Design

2.1. The damper can be supplied

- with manual control including handle and locking nut
- ready to mount an actuator
- with actuator

Fig. 3 Damper with manual control including handle and locking nut

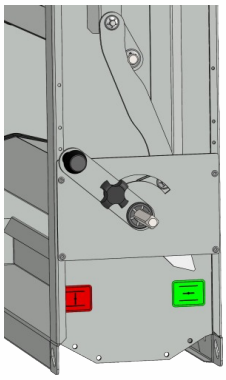

Fig. 4 Damper ready to mount an actuator

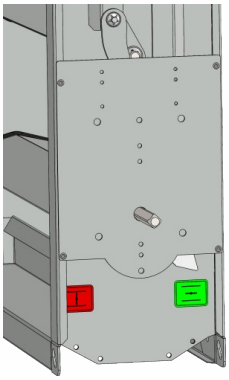

3. Basic range, dimensions, weights

3.1. Basic range, effective cross-section

Dampers up to B=445 consist of smaller blades with the spacing of 95 mm, dampers from B=450 mm consist of larger blades with the spacing of 145 mm.

Tab. 3.1.1. Basic range, effective cross section in m²

		A [mm]															
		200	**250**	**300**	**315**	**400**	**500**	**600**	**630**	**800**	**1000**	**1200**	**1250**	**1400**	**1600**	**1800**	**2000**
B [mm]	**200**	0,028	0,036	0,043	0,045	0,057	0,071	0,085	0,089	0,114	0,142	0,170	0,178	–	–	–	–
	250	0,028	0,036	0,043	0,045	0,057	0,071	0,085	0,089	0,114	0,142	0,170	0,178	–	–	–	–
	300	0,044	0,055	0,065	0,069	0,087	0,109	0,131	0,137	0,174	0,218	0,262	0,273	–	–	–	–
	315	0,044	0,055	0,065	0,069	0,087	0,109	0,131	0,137	0,174	0,218	0,262	0,273	–	–	–	–
	400	0,059	0,074	0,088	0,093	0,118	0,147	0,176	0,185	0,235	0,294	0,353	0,368	–	–	–	–
	500	0,068	0,085	0,102	0,107	0,136	0,171	0,205	0,215	0,273	0,341	0,409	0,426	0,477	0,546	0,614	0,682
	600	0,092	0,115	0,137	0,144	0,183	0,229	0,275	0,289	0,366	0,458	0,550	0,573	0,641	0,733	0,824	0,916
	630	0,092	0,115	0,137	0,144	0,183	0,229	0,275	0,289	0,366	0,458	0,550	0,573	0,641	0,733	0,824	0,916
	800	0,115	0,144	0,173	0,181	0,230	0,288	0,345	0,362	0,460	0,575	0,690	0,719	0,805	0,920	1,035	1,150
	1000	0,138	0,173	0,208	0,218	0,277	0,346	0,415	0,436	0,554	0,692	0,830	0,865	0,969	1,107	1,246	1,384
	1200	0,185	0,232	0,278	0,292	0,370	0,463	0,556	0,583	0,741	0,926	1,111	1,158	1,296	1,482	1,667	1,852
	1250	0,185	0,232	0,278	0,292	0,370	0,463	0,556	0,583	0,741	0,926	1,111	1,158	1,296	1,482	1,667	1,852
	1400	0,209	0,261	0,313	0,329	0,417	0,522	0,626	0,657	0,834	1,043	1,252	1,304	1,460	1,669	1,877	2,086
	1600	0,232	0,290	0,348	0,365	0,464	0,580	0,696	0,731	0,928	1,160	1,392	1,450	1,624	1,856	2,088	2,320
	1800	0,279	0,349	0,418	0,439	0,558	0,697	0,836	0,878	1,115	1,394	1,673	1,743	1,952	2,230	2,509	2,788
	2000	0,302	0,378	0,453	0,476	0,604	0,756	0,907	0,952	1,209	1,511	1,813	1,889	2,115	2,418	2,720	3,022

3.2. Weights

Weights of dampers without actuator are shown in table 3.2.1. If the damper is equipped with an actuator, actuator weight should be added, see chapter 7.

Tab. 3.2.1. Damper weight without actuator

		A [mm]															
		200	**250**	**300**	**315**	**400**	**500**	**600**	**630**	**800**	**1000**	**1200**	**1250**	**1400**	**1600**	**1800**	**2000**
B [mm]	**200**	3,3	3,6	3,9	4	4,4	5	5,6	5,8	6,8	7,9	9,1	9,4	–	–	–	–
	250	3,5	3,8	4,1	4,2	4,8	5,4	6,1	6,3	7,3	8,6	9,9	10,2	–	–	–	–
	300	4,1	4,4	4,8	4,9	5,5	6,2	6,9	7,1	8,3	9,7	11,1	11,4	–	–	–	–
	315	4,2	4,5	4,9	5	5,6	6,3	7	7,2	8,4	9,9	11,3	11,6	–	–	–	–
	400	4,8	5,2	5,6	5,7	6,4	7,2	7,9	8,2	9,5	11,1	12,7	13,1	–	–	–	–
	500	5,1	5,5	6	6,1	6,8	7,7	8,6	8,8	10,3	12,1	13,8	14,3	21	23,4	25,8	28,2
	600	5,9	6,4	6,9	7	7,9	8,8	9,8	10,1	11,7	13,6	15,6	16,1	23,7	26,4	29,1	31,8
	630	6,1	6,6	7	7,2	8	9	10	10,3	11,9	13,9	15,8	16,3	24,1	26,8	29,5	32,2
	800	7,1	7,7	8,2	8,4	9,4	10,5	11,7	12	14	16,2	18,5	19,1	28,3	31,5	34,7	37,9
	1000	8,3	9	9,6	9,8	10,9	12,2	13,5	13,9	16,1	18,7	21,3	21,9	32,6	36,3	39,9	43,5
	1200	8,3	9,1	10	10,3	15,6	17,3	19,1	19,6	22,5	26	29,5	30,3	39,5	43,9	48,3	52,8
	1250	8,4	9,3	10,1	10,4	15,8	17,6	19,4	19,9	22,9	26,4	29,9	30,8	40	44,5	49	53,5
	1400	9,3	10,3	11,2	11,5	17,5	19,4	21,3	21,9	25,2	29	32,9	33,8	44,1	49	53,9	58,9
	1600	10,3	11,3	12,4	12,7	19,3	21,4	23,4	24,1	27,6	31,7	35,9	36,9	48,3	53,6	59	64,3
	1800	11,4	12,6	13,7	14	21,4	23,6	25,9	26,6	30,5	35	39,5	40,7	54	59,9	65,9	71,9
	2000	12,6	13,8	15	15,4	23,4	25,8	28,3	29,1	33,2	38,2	43,1	44,3	58,8	65,2	71,7	78,2

3.3. Dimensions

For damper control, 250 mm of space is needed, in the direction of the main shaft axis. Position of the main shaft axis is shown in Table 3.2.1. The handle of dampers with manual control does not exceed the outline of the damper body (frame).

Fig. 5 Damper dimensions

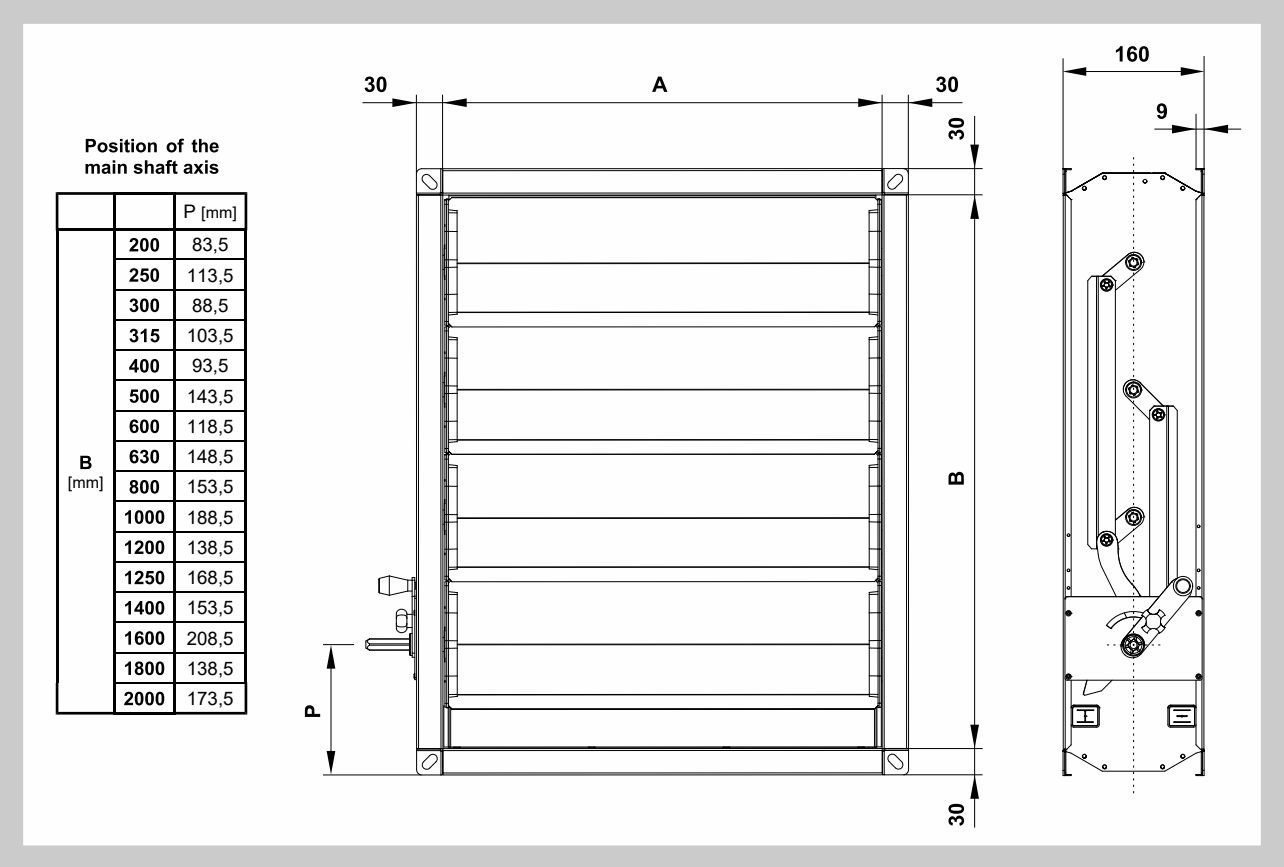

Position of the main shaft axis

		P [mm]
B [mm]	200	83,5
	250	113,5
	300	88,5
	315	103,5
	400	93,5
	500	143,5
	600	118,5
	630	148,5
	800	153,5
	1000	188,5
	1200	138,5
	1250	168,5
	1400	153,5
	1600	208,5
	1800	138,5
	2000	173,5

Fig. 6 Connection dimensions

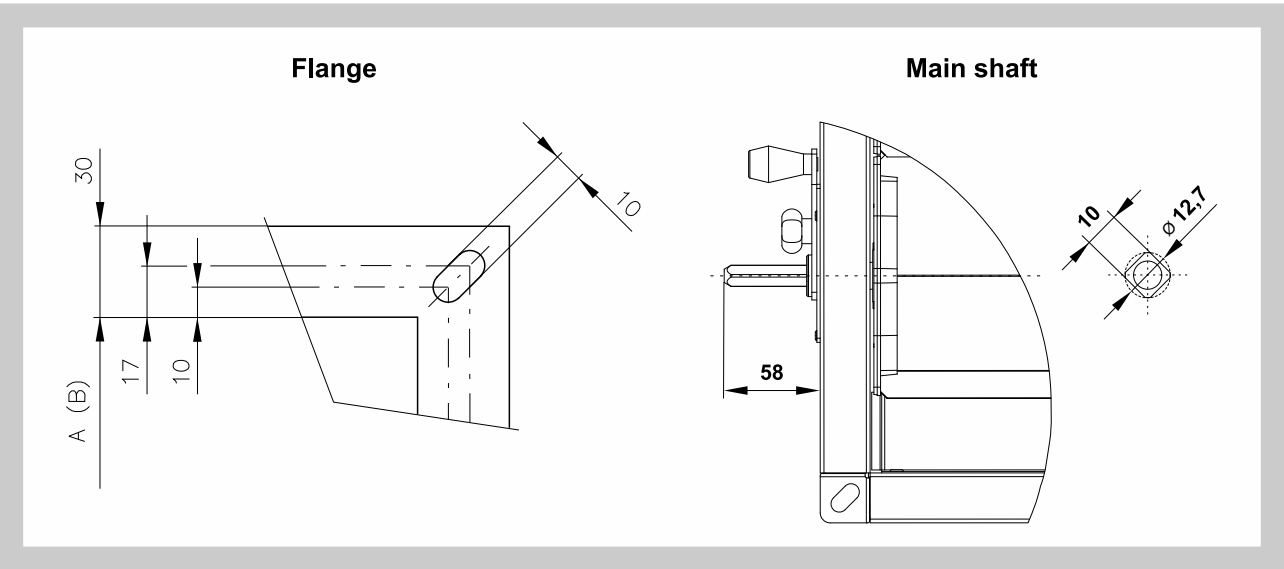

3.4. Installation in the duct

The dampers are indended to be incorporated into HVAC duct. If the damper is installed in such way that blade axis are not horizontal, 50% stronger actuators are needed to control the damper compared to the same damper with horizontal blades.

III. TECHNICAL DATA

4. Basic parameters

4.1. Maximum allowed duct pressure, maximum pressure

Maximum allowed duct pressure is ±1500 Pa. Maximum allowed control pressure drop or difference of the static pressure in the sections before and after the damper is shown in Table 4.1.1.

Tab. 4.1.1. Maximum allowed pressure difference (Pa)

		A [mm]															
		200	**250**	**300**	**315**	**400**	**500**	**600**	**630**	**800**	**1000**	**1200**	**1250**	**1400**	**1600**	**1800**	**2000**
B [mm]	**200**	1500	1500	1500	1500	1500	1500	1500	1500	1500	1200	1200	1200	–	–	–	–
	250	1500	1500	1500	1500	1500	1500	1500	1500	1500	1200	1200	1200	–	–	–	–
	300	1500	1500	1500	1500	1500	1500	1500	1500	1500	1200	1200	1200	–	–	–	–
	315	1500	1500	1500	1500	1500	1500	1500	1500	1500	1200	1200	1200	–	–	–	–
	400	1500	1500	1500	1500	1500	1500	1500	1500	1500	1200	1200	1200	–	–	–	–
	500	1500	1500	1500	1500	1500	1500	1500	1500	1500	1500	1500	1500	1200	1200	1000	1000
	600	1500	1500	1500	1500	1500	1500	1500	1500	1500	1500	1500	1500	1200	1200	1000	1000
	630	1500	1500	1500	1500	1500	1500	1500	1500	1500	1500	1500	1500	1200	1200	1000	1000
	800	1500	1500	1500	1500	1500	1500	1500	1500	1500	1500	1500	1500	1200	1200	1000	1000
	1000	1500	1500	1500	1500	1500	1500	1500	1500	1500	1500	1500	1500	1200	1200	1000	1000
	1200	1500	1500	1500	1500	1500	1500	1500	1500	1500	1500	1500	1500	1200	1200	1000	1000
	1250	1500	1500	1500	1500	1500	1500	1500	1500	1500	1500	1500	1500	1200	1200	1000	1000
	1400	1500	1500	1500	1500	1500	1500	1500	1500	1500	1500	1500	1500	1200	1200	1000	1000
	1600	1500	1500	1500	1500	1500	1500	1500	1500	1500	1500	1500	1500	1200	1200	1000	1000
	1800	1500	1500	1500	1500	1500	1500	1500	1500	1500	1500	1500	1500	1200	1200	1000	1000
	2000	1500	1500	1500	1500	1500	1500	1500	1500	1500	1500	1500	1500	1200	1200	1000	1000

4.2. Closing torque

Aerodynamic forces acting on the blades and hence, on the closing mechanism depend, among other factors, on the fan characteristics, or on the external pressure drop characteristics of the HVAC system connected. At the moment the damper is almost closed, the aerodynamic forces are already negligeable. For dampers used in another position than with damper blade axis hrizontal, 50% actuator torque increase is highly recommended.

Tab. 4.2.1. Closing torque Nm

		A [mm]															
		200	**250**	**300**	**315**	**400**	**500**	**600**	**630**	**800**	**1000**	**1200**	**1250**	**1400**	**1600**	**1800**	**2000**
B [mm]	**200**	2	2	2	2	2	2	2	2	4	4	4	4	–	–	–	–
	250	2	2	2	2	2	2	4	4	4	4	4	4	–	–	–	–
	300	2	2	2	2	2	4	4	4	4	4	4	4	–	–	–	–
	315	2	2	2	2	4	4	4	4	4	4	4	4	–	–	–	–
	400	4	4	4	4	4	4	4	4	4	4	10	10	–	–	–	–
	500	4	4	4	4	4	4	4	4	4	10	10	10	10	10	10	10
	600	4	4	4	4	4	4	10	10	10	10	10	10	10	10	10	10
	630	4	4	4	4	4	4	10	10	10	10	10	10	10	10	10	10
	800	4	10	10	10	10	10	10	10	10	10	10	10	10	10	10	10
	1000	10	10	10	10	10	10	10	10	10	10	10	10	10	10	15	15
	1200	10	10	10	10	10	10	10	10	10	10	10	15	15	15	15	15
	1250	10	10	10	10	10	10	10	10	10	10	15	15	15	15	15	15
	1400	10	10	10	10	10	10	10	10	10	15	15	15	15	15	15	15
	1600	10	10	10	10	10	10	10	10	15	15	15	15	15	15	20	20
	1800	10	10	10	10	10	15	15	15	15	15	15	15	20	20	20	20
	2000	10	10	15	15	15	15	15	15	15	15	20	20	20	20	20	20

5. Flow characteristic, pressure drop, tightness

Graph 1 Flow characteristics at constant pressure drop of 40 Pa

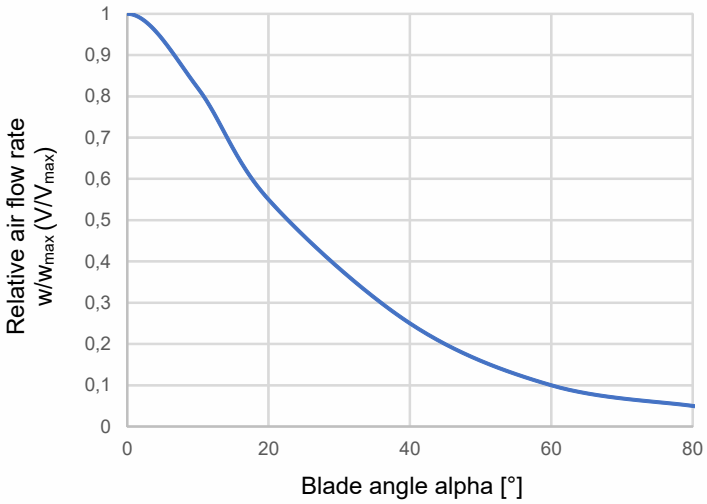

Graph 2 Pressure drop as function of the air velocity and blade angle, damper in the duct

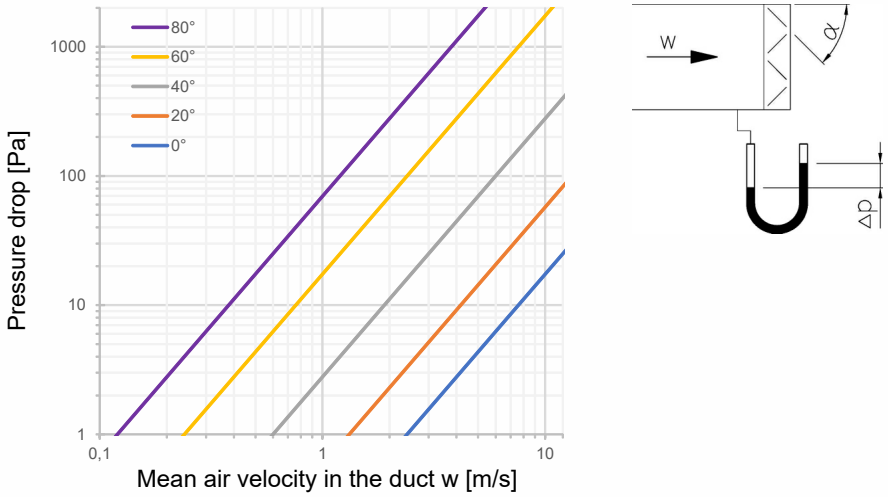

Graph 3 Pressure drop as function of the air velocity and blade angle, damper at the end of the duct

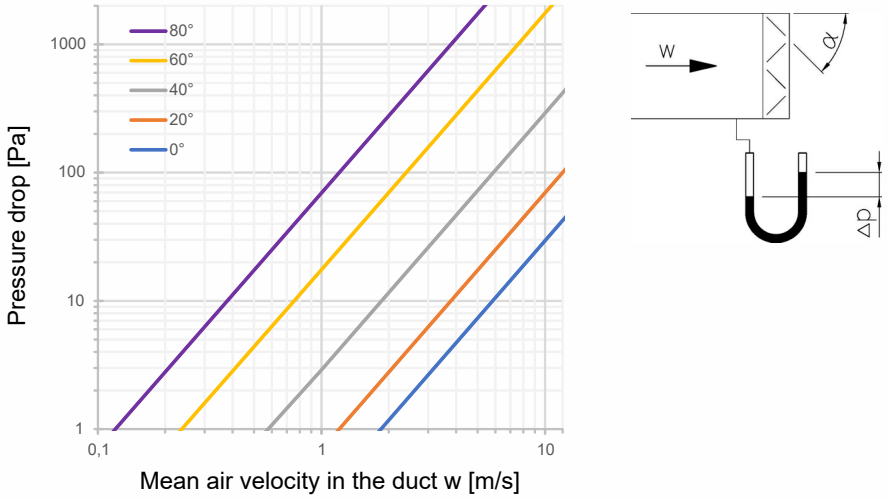

Graph 4 Body (frame) leakage class C acc. to EN 1751

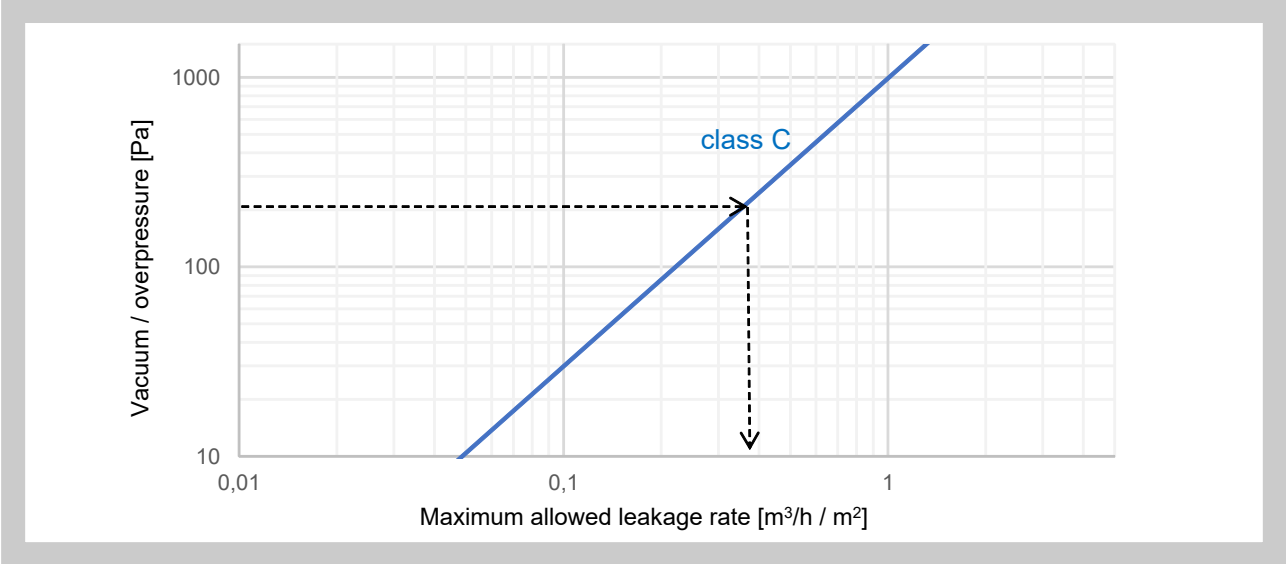

Tab. 5.1.1. Virtual surface area of damper body (frame) in m² considered for maximum allowed body leakage rate in acc. with EN 1751

		A [mm]															
		200	**250**	**300**	**315**	**400**	**500**	**600**	**630**	**800**	**1000**	**1200**	**1250**	**1400**	**1600**	**1800**	**2000**
B [mm]	**200**	0,8	0,9	1	1	1,2	1,4	1,6	1,7	2	2,4	2,8	2,9	–			
	250	0,9	1	1,1	1,1	1,3	1,5	1,7	1,8	2,1	2,5	2,9	3				
	300	1	1,1	1,2	1,2	1,4	1,6	1,8	1,9	2,2	2,6	3	3,1				
	315	1	1,1	1,2	1,3	1,4	1,6	1,8	1,9	2,2	2,6	3	3,1				
	400	1,2	1,3	1,4	1,4	1,6	1,8	2	2,1	2,4	2,8	3,2	3,3				
	500	1,4	1,5	1,6	1,6	1,8	2	2,2	2,3	2,6	3	3,4	3,5	3,8	4,2	4,6	5
	600	1,6	1,7	1,8	1,8	2	2,2	2,4	2,5	2,8	3,2	3,6	3,7	4	4,4	4,8	5,2
	630	1,7	1,8	1,9	1,9	2,1	2,3	2,5	2,5	2,9	3,3	3,7	3,8	4,1	4,5	4,9	5,3
	800	2	2,1	2,2	2,2	2,4	2,6	2,8	2,9	3,2	3,6	4	4,1	4,4	4,8	5,2	5,6
	1000	2,4	2,5	2,6	2,6	2,8	3	3,2	3,3	3,6	4	4,4	4,5	4,8	5,2	5,6	6
	1200	2,8	2,9	3	3	3,2	3,4	3,6	3,7	4	4,4	4,8	4,9	5,2	5,6	6	6,4
	1250	2,9	3	3,1	3,1	3,3	3,5	3,7	3,8	4,1	4,5	4,9	5	5,3	5,7	6,1	6,5
	1400	3,2	3,3	3,4	3,4	3,6	3,8	4	4,1	4,4	4,8	5,2	5,3	5,6	6	6,4	6,8
	1600	3,6	3,7	3,8	3,8	4	4,2	4,4	4,5	4,8	5,2	5,6	5,7	6	6,4	6,8	7,2
	1800	4	4,1	4,2	4,2	4,4	4,6	4,8	4,9	5,2	5,6	6	6,1	6,4	6,8	7,2	7,6
	2000	4,4	4,5	4,6	4,6	4,8	5	5,2	5,3	5,6	6	6,4	6,5	6,8	7,2	7,6	8

6. Noise data

6.1. To some extent, the damper prevents the propagation of the noise between duct sections separated by the damper. Neverhleless, the damper generates its own noise, as a function of the mean air velocity in the duct and damper blade angle, in acc. with Table 6.1.1, Graph 5, and the following formula for the total acoustic power corrected by A-filter.

$$L_{wA} = L_{wA°} + K$$

Tab. 6.1.1. Size correction factor K (dB) for acoustic power

		A [mm]															
		200	**250**	**300**	**315**	**400**	**500**	**600**	**630**	**800**	**1000**	**1200**	**1250**	**1400**	**1600**	**1800**	**2000**
B [mm]	**200**	-14	-13	-12	-12	-11	-10	-9	-9	-8	-7	-6	-6	–			
	250	-13	-12	-11	-11	-10	-9	-8	-8	-7	-6	-5	-5				
	300	-12	-11	-10	-10	-9	-8	-7	-7	-6	-5	-4	-4				
	315	-12	-11	-10	-10	-9	-8	-7	-7	-6	-5	-4	-4				
	400	-11	-10	-9	-9	-8	-7	-6	-6	-5	-4	-3	-3				
	500	-10	-9	-8	-8	-7	-6	-5	-5	-4	-3	-2	-2	-2	-1	0	0
	600	-9	-8	-7	-7	-6	-5	-4	-4	-3	-2	-1	-1	-1	0	0	1
	630	-9	-8	-7	-7	-6	-5	-4	-4	-3	-2	-1	-1	-1	0	1	1
	800	-8	-7	-6	-6	-5	-4	-3	-3	-2	-1	0	0	0	1	2	2
	1000	-7	-6	-5	-5	-4	-3	-2	-2	-1	0	1	1	1	2	3	3
	1200	-6	-5	-4	-4	-3	-2	-1	-1	0	1	2	2	2	3	3	4
	1250	-6	-5	-4	-4	-3	-2	-1	-1	0	1	2	2	2	3	4	4
	1400	-6	-5	-4	-4	-3	-2	-1	-1	0	1	2	2	3	4	4	4
	1600	-5	-4	-3	-3	-2	-1	0	0	1	2	3	3	4	4	5	5
	1800	-4	-3	-2	-2	-1	0	0	1	2	3	3	4	4	5	5	6
	2000	-4	-3	-2	-2	-1	0	1	1	2	3	4	4	4	5	6	6

Graph 5 Aerodynamic noise emissions to the duct $L_{wA°}$ – sound power level corrected by A-filter for a damper of 1 m² cross section

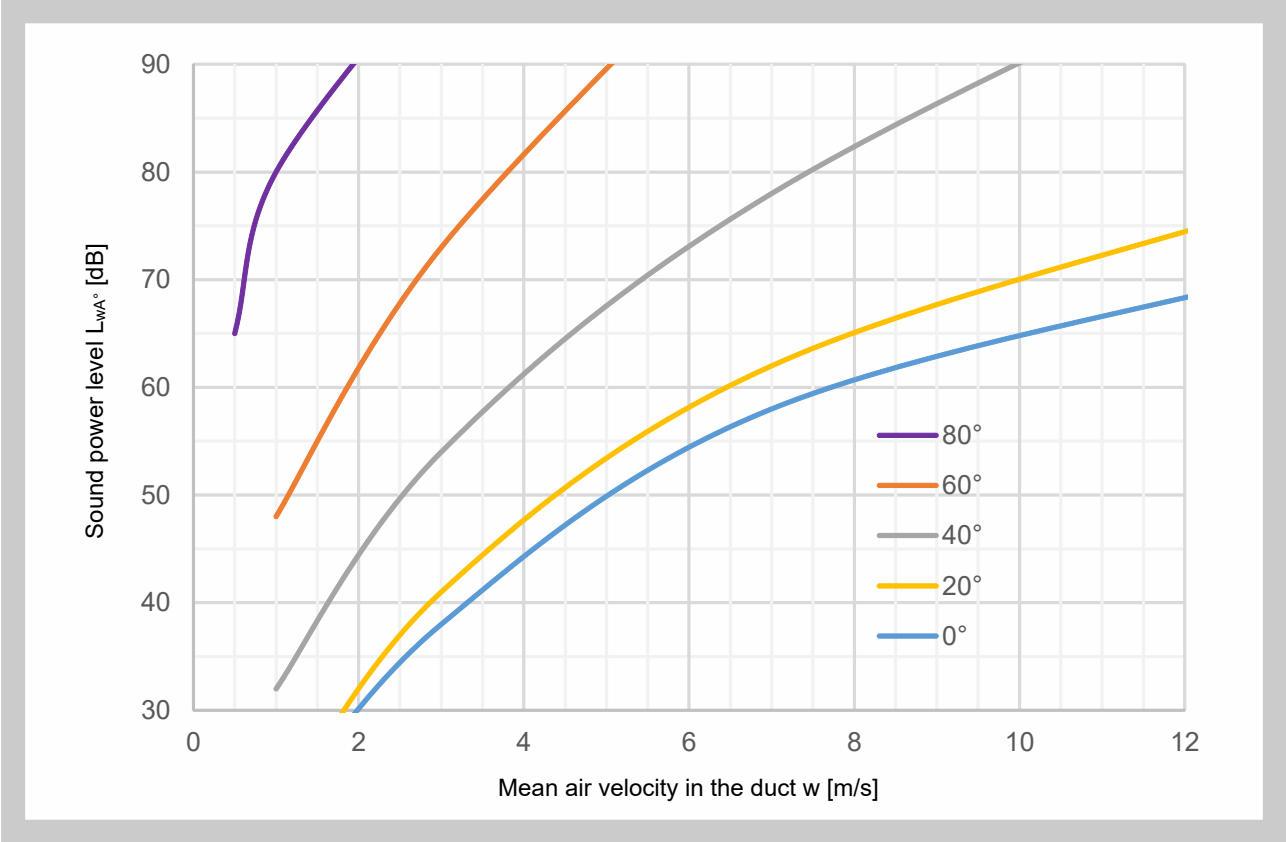

7. Electrical elements, wiring diagram

7.1. Assignment of Belimo actuators to dampers

Tab. 7.1.1. Assignment of Belimo actuators to dampers (by size) for dampers installed with horizontal blade axis (actuators with emergency function in brackets)

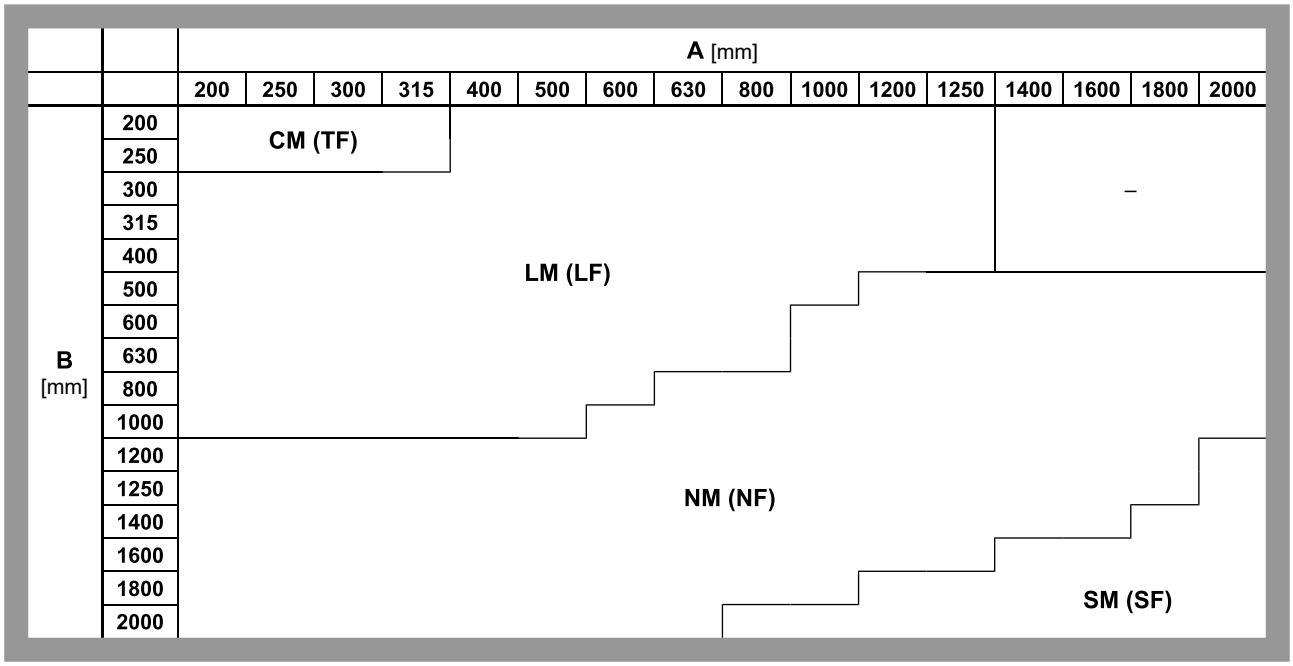

Tab. 7.1.2. Parameters of actuators, assignment to damper design

Type of servo actuator		Design	Position signal	Emergency functions	Torque	Weight [kg]	Dimensions L x H x W [mm]
CM	Belimo CM 230-L	.45	NO	NO	2 Nm	0,2	158 x 56 x 28
	Belimo CM 24-L	.55	NO			0,2	
	Belimo CM 24-SR-L	.57	YES			0,2	
LM	Belimo LM 230A-S	.46	YES		5 Nm	0,6	116 x 61 x 66
	Belimo LM 230A	.45	NO			0,5	
	Belimo LM 24A-S	.56	YES			0,6	
	Belimo LM 24A	.55	NO			0,5	
	Belimo LM 24A-SR	.57	YES			0,5	
NM	Belimo NM 230A-S	.46	YES		10 Nm	0,9	124 x 62 x 80
	Belimo NM 230A	.45	NO			0,8	
	Belimo NM 24A-S	.56	YES			0,9	
	Belimo NM 24A	.55	NO			0,8	
	Belimo NM 24A-SR	.57	YES			0,8	
SM	Belimo SM 230A-S	.46	YES		20 Nm	1,1	139 x 64 x 88
	Belimo SM 230A	.45	NO			1,1	
	Belimo SM 24A-S	.56	YES			1,1	
	Belimo SM 24A	.55	NO			1,0	
	Belimo SM 24A-SR	.57	YES			1,1	
TF	Belimo TF230	.43	NO	YES	2.5 Nm	0,62	104x84x77
	Belimo TF24	.53	NO			0,62	104x84x77
	Belimo TF230-S	.R44	YES			0,66	104x84x77
	Belimo TF24-S	.R22	YES			0,66	104x84x77
LF	Belimo LF 230A	.43	NO		4 Nm	1,7	130 x 82 x 98
	Belimo LF 230-S	.R44	YES			1,8	
	Belimo LF 24A	.53	NO			1,5	
	Belimo LF 24A-S	.R22	YES			1,6	
NF	Belimo NFA	.43	NO		10 Nm	1,8	182 x 93 x 98
	Belimo NFA-S2	.48	YES			1,9	
	Belimo NF 24A	.53	NO			2,1	
	Belimo NF 24A-S2	.58	YES			2,3	
SF	Belimo SFA	.43	NO		20 Nm	1,7	182 x 93 x 98
	Belimo SFA-S2	.48	YES			2,0	
	Belimo SF 24A	.53	NO			2,3	
	Belimo SF 24A-S2	.58	YES			2,4	

Tab. 7.1.3. Supply voltage and power input

Type of actuator	Supply voltage	Power input		
		In operation	Resting position	Dimensioning
CM 230-L	AC 100 ... 240 V, 50/60 Hz	1,5 W	1 W	3 VA
CM 24-L	AC 24 V, 50/60 Hz; DC 24 V	0,5 W	0,2 W	1 VA
CM 24-SR-L	AC 24 V, 50/60 Hz; DC 24 V	1 W	0,5 W	2 VA
LM 230A, LM 230A-S	AC 100 ... 240 V, 50/60 Hz	1,5 W	0,4 W	4 VA
LM 24A, LM 24A-S	AC 24 V, 50/60 Hz; DC 24 V	1 W	0,2 W	2 VA
LM 24A-SR	AC 24 V, 50/60 Hz; DC 24 V	1 W	0,4 W	2 VA
NM 230A-F, NM 230A-S	AC 100 ... 240 V, 50/60 Hz	2,5 W	0,6 W	6 VA
NM 24A-F, NM 24A-S	AC 24 V, 50/60 Hz; DC 24 V	1,5 W	0,2 W	3,5 VA
NM 24A-SR	AC 24 V, 50/60 Hz; DC 24 V	2 W	0,4 W	4 VA
SM 230A, SM 230A-S	AC 100 ... 240 V, 50/60 Hz	2,5 W	0,6 W	6 VA
SM 24A, SM 24A-S	AC 24 V, 50/60 Hz; DC 24 V	2 W	0,2 W	4 VA
SM 24A-SR	AC 24 V, 50/60 Hz; DC 24 V	2 W	0,4 W	4 VA
TF24, TF24-S	AC 19.2…28.8 V / DC 21.6…28.8 V	2,5 W	1,5 W	5VA
TF230, TF230-S	AC 85…265 V	2,5 W	1,5 W	5VA
LF 230, LF 230-S	AC 198 … 264 V, 50/60 Hz	5 W	3 W	7 VA
LF 24, LF 24-S	AC 24 V, 50/60 Hz; DC 24 V	5 W	2,5 W	7 VA
NFA, NFA-S2	AC 24 ... 240 V, 50/60 Hz / DC 24 ... 125 V	6 W	2,5 W	9,5 VA
NF 24A, NF 24A-S2	AC 24 V, 50/60 Hz; DC 24 V	6 W	2,5 W	8,5 VA
SFA, SFA-S2	AC 24 ... 240 V, 50/60 Hz / DC 24 ... 125 V	7 W	3,5 W	18 VA
SF 24A, SF 24A-S2	AC 24 V, 50/60 Hz; DC 24 V	5 W	2,5 W	7,5 VA

7.2. Wiring diagram of servo actuators Belimo

Fig. 7 Wiring diagram of servo actuators Belimo CM 230-L

Notes:

- Caution: Power supply voltage!
- Parallel connection of other driver is possible. Pay attention to the power input data.

Cable colours:
1 = blue
2 = brown
3 = white

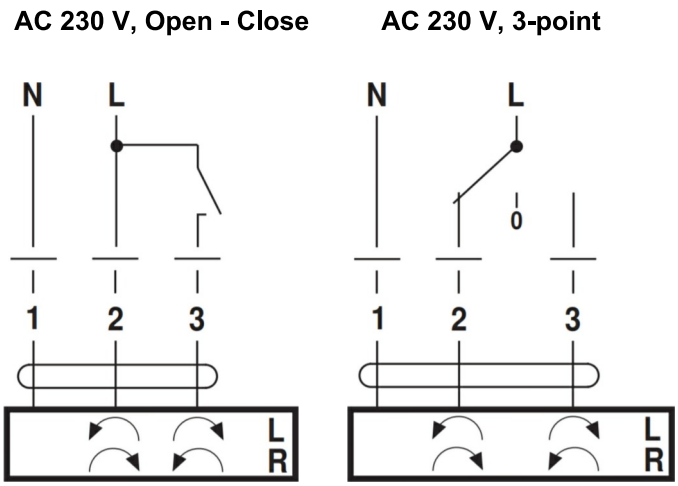

Fig. 8 Wiring diagram of servo actuators Belimo CM 24-L

Notes:

- Connection through an insulation transformer.
- Parallel connection of other driver is possible. Pay attention to the power input data.

Cable colours:
1 = black
2 = red
3 = white

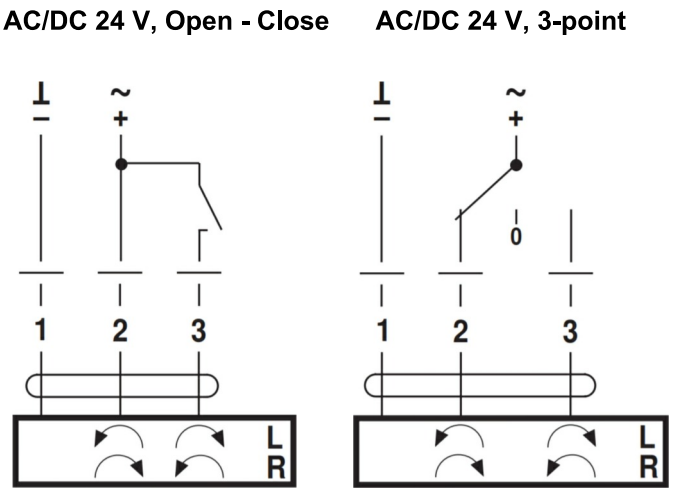

Fig. 9 Wiring diagram of servo actuators Belimo CM 24-SR-L

Notes:

- Connection through an insulation transformer.
- Parallel connection of other driver is possible. Pay attention to the power input data.

Cable colours:
1 = black
2 = red
3 = white
5 = orange

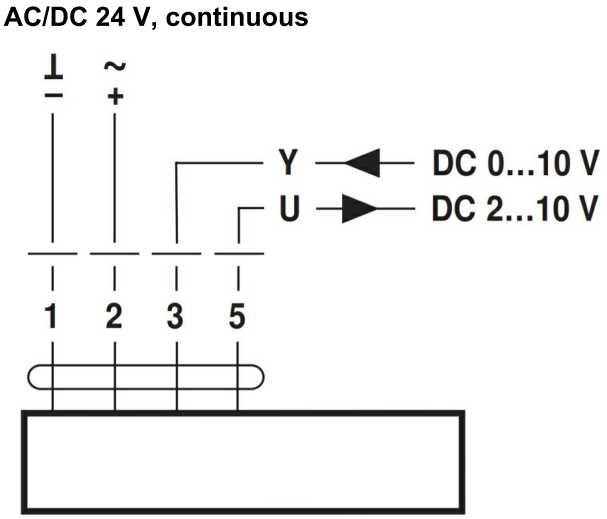

Fig. 10 Wiring diagram of servo actuators Belimo LM 230A, NM 230A, SM 230A

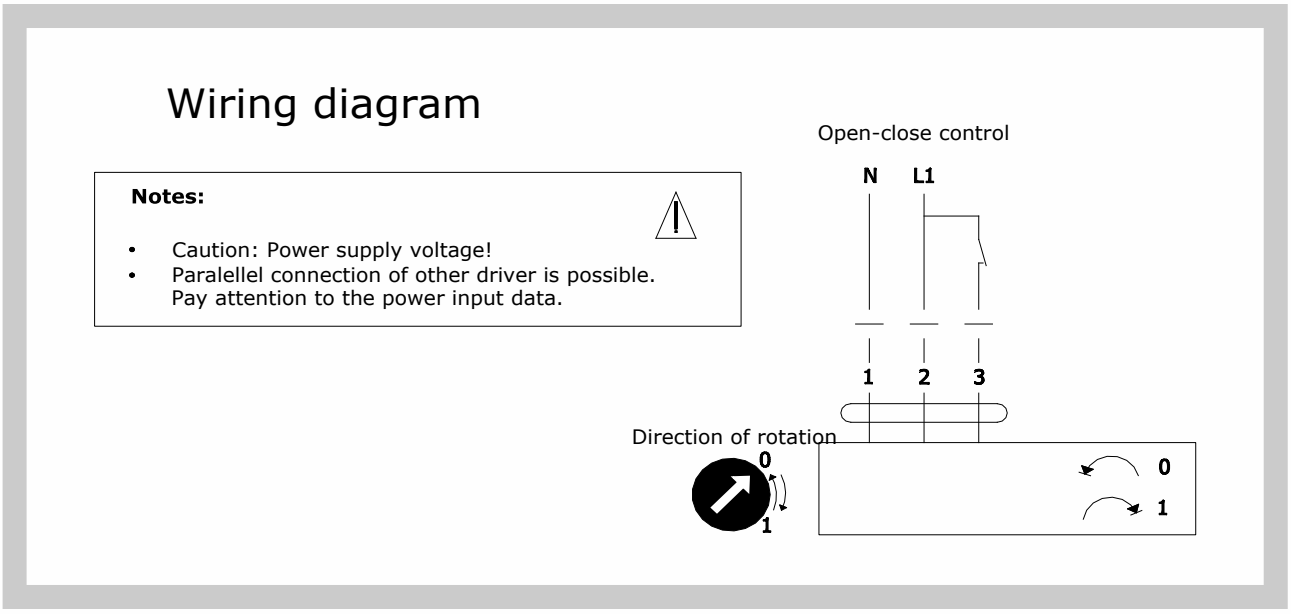

Fig. 11 Wiring diagram of servo actuators Belimo LM 24A, NM 24A, SM 24A

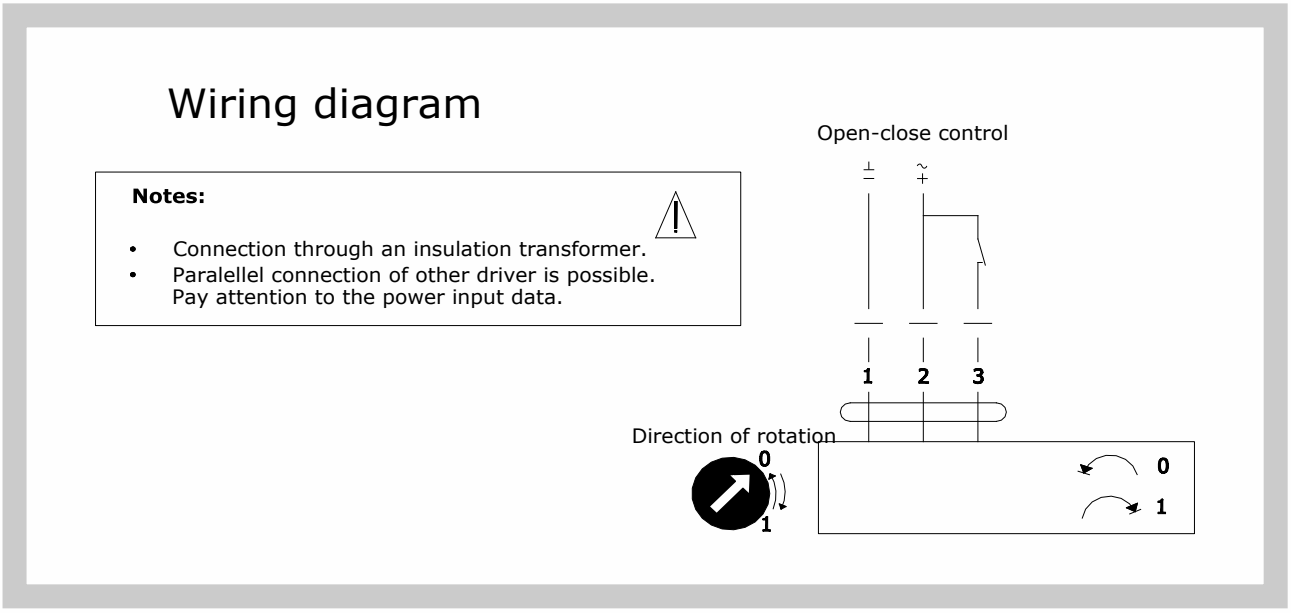

Fig. 12 Wiring diagram of servo actuators Belimo LM 24A-SR, NM 24A-SR, SM 24A-SR

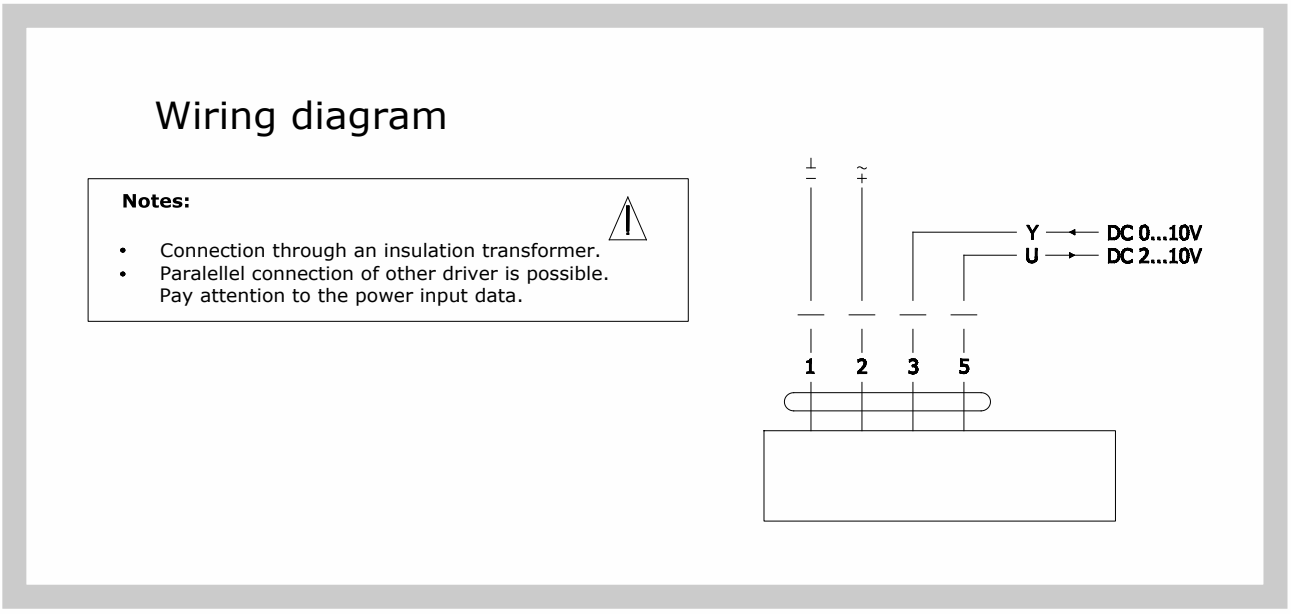

Fig. 13 Wiring diagram of servo actuators Belimo LM230A-S, NM 230A-S, SM 230A-S

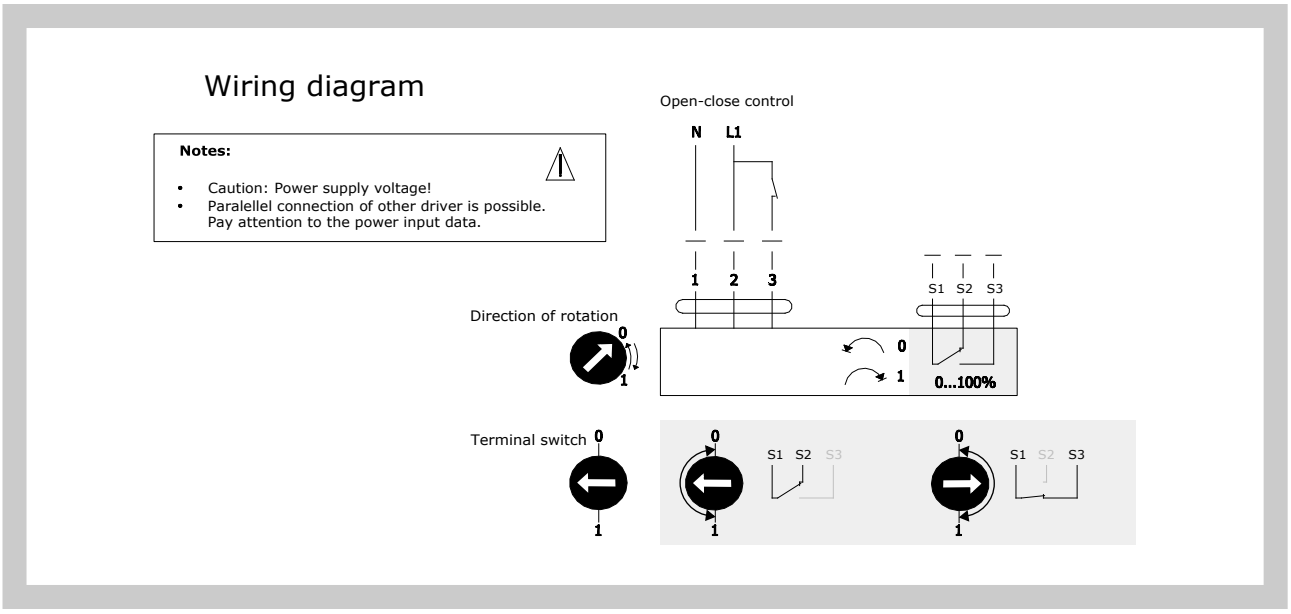

Fig. 14 Wiring diagram of servo actuators Belimo LM24A-S, NM 24A-S, SM 24A-S

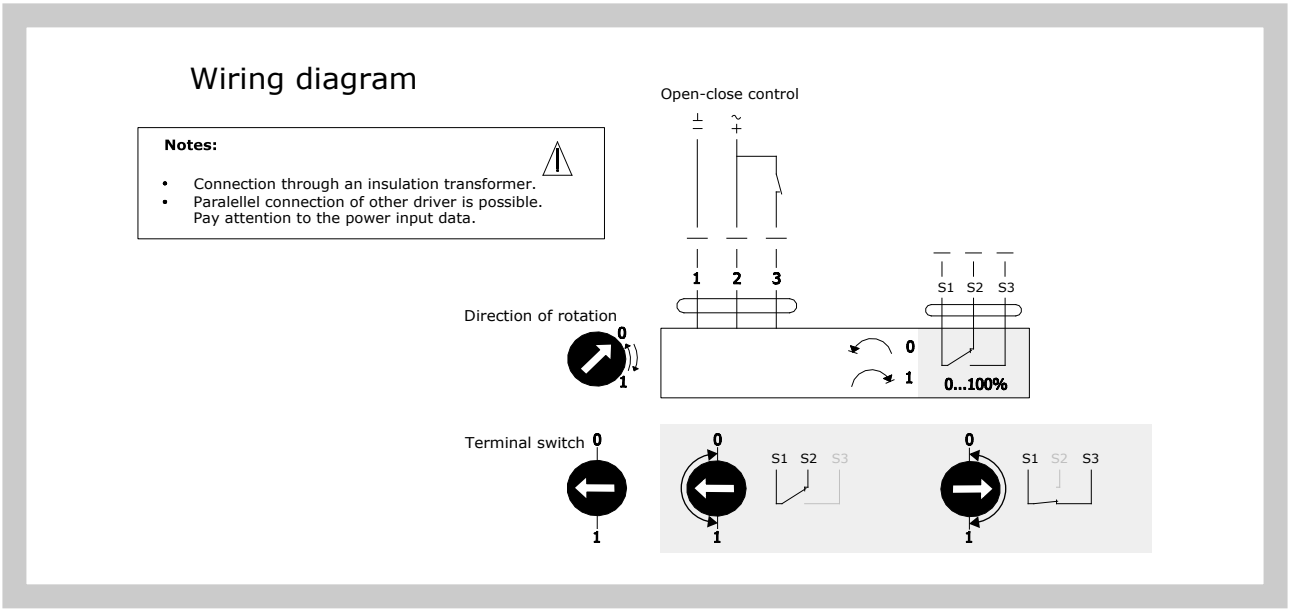

Fig. 15 Wiring diagram of servo actuators Belimo TF24A, LF 24A, NF 24A, SF 24A

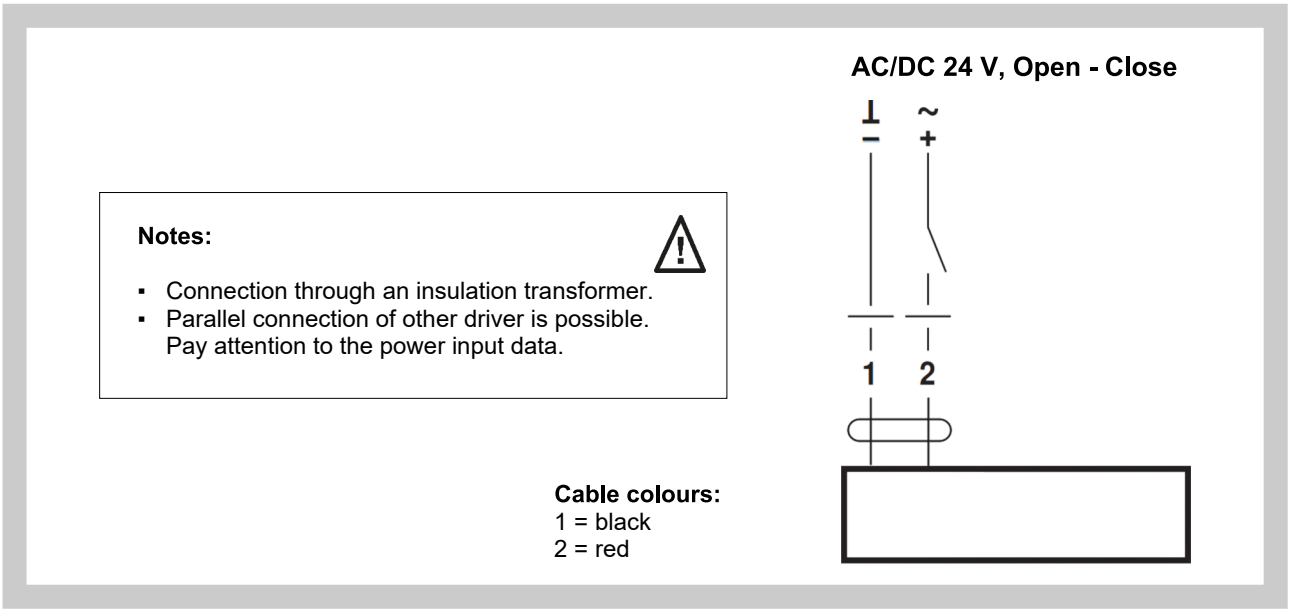

Fig. 16 Wiring diagram of servo actuators Belimo TF230, LF 230

Notes:

- Caution: Power supply voltage!
- Parallel connection of other driver is possible. Pay attention to the power input data.

Cable colours:
1 = blue
2 = brown

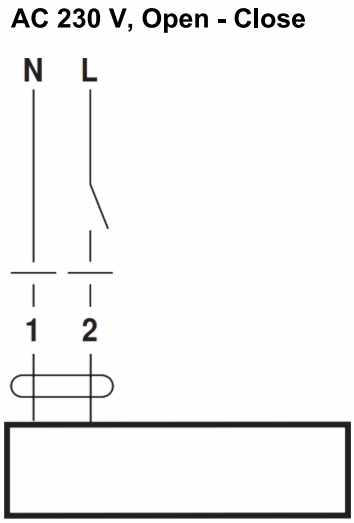

Fig. 17 Wiring diagram of servo actuators Belimo TF24-S, LF 24-S

Notes:

- Connection through an insulation transformer.
- Parallel connection of other driver is possible. Pay attention to the power input data.

Cable colours:
1 = black
2 = red
S1 = white
S2 = white
S3 = white

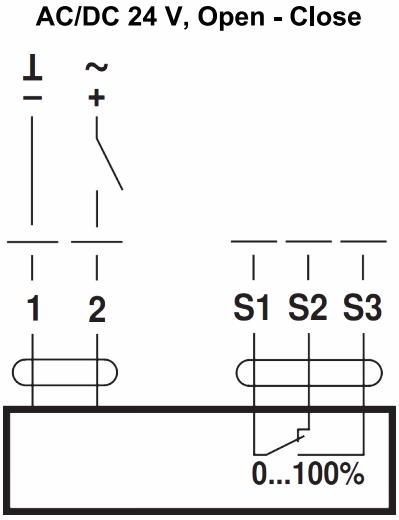

Fig. 18 Wiring diagram of servo actuators Belimo TF230-S, LF 230-S

Notes:

- Caution: Power supply voltage!
- Parallel connection of other driver is possible. Pay attention to the power input data.

Cable colours:
1 = blue
2 = brown
S1 = white
S2 = white
S3 = white

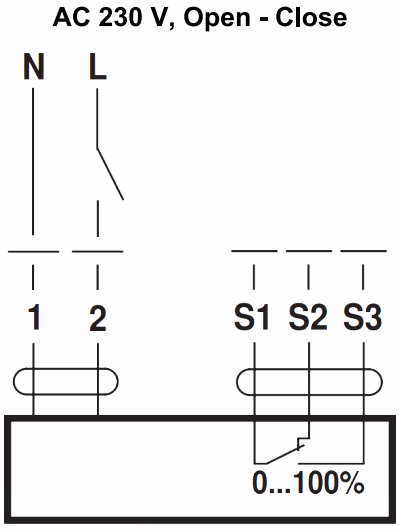

Fig. 19 Wiring diagram of servo actuators Belimo NFA, SFA

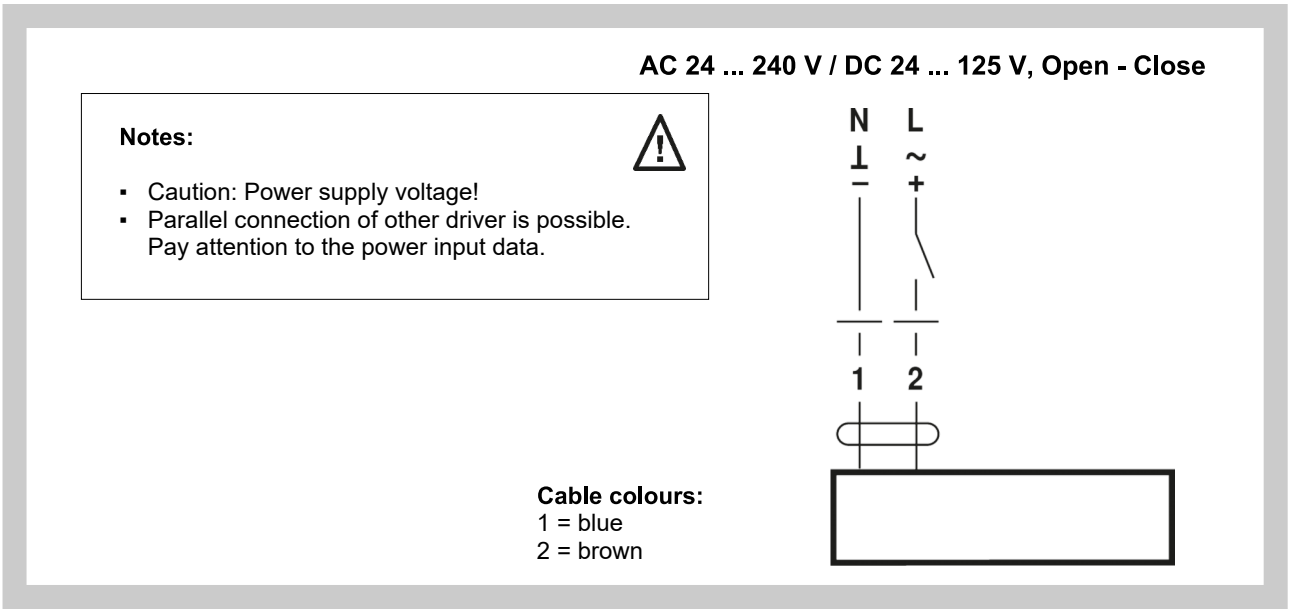

Fig. 20 Wiring diagram of servo actuators Belimo NF 24A-S2, SF 24A-S2

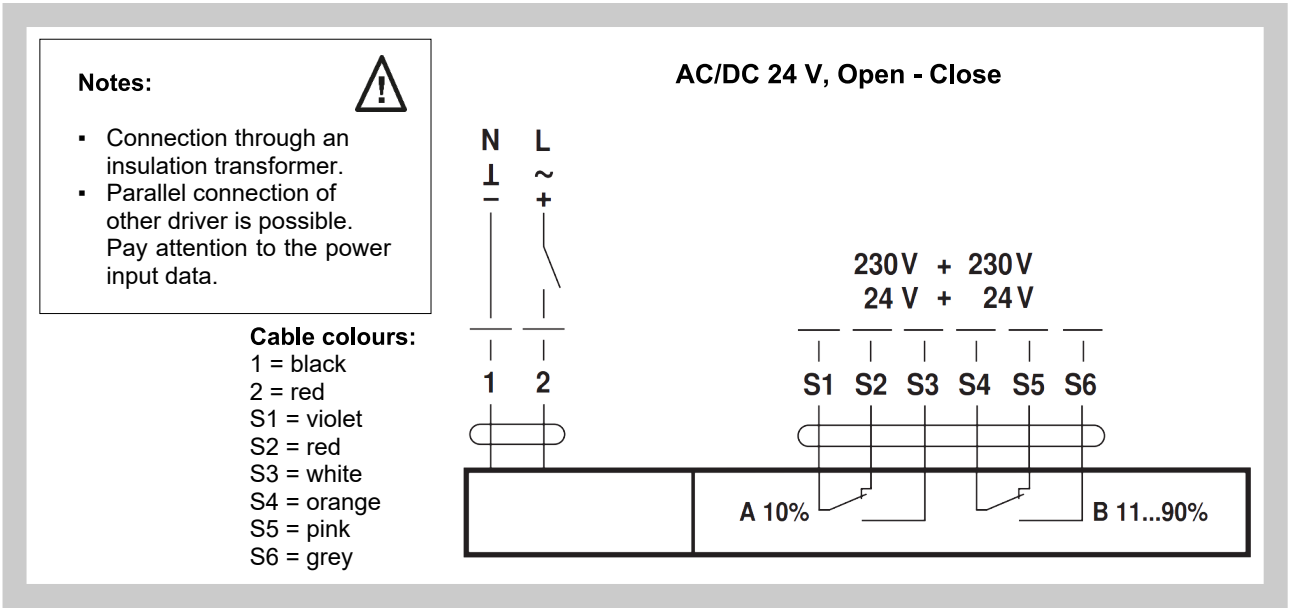

Fig. 21 Wiring diagram of servo actuators Belimo NFA-S2, SFA-S2

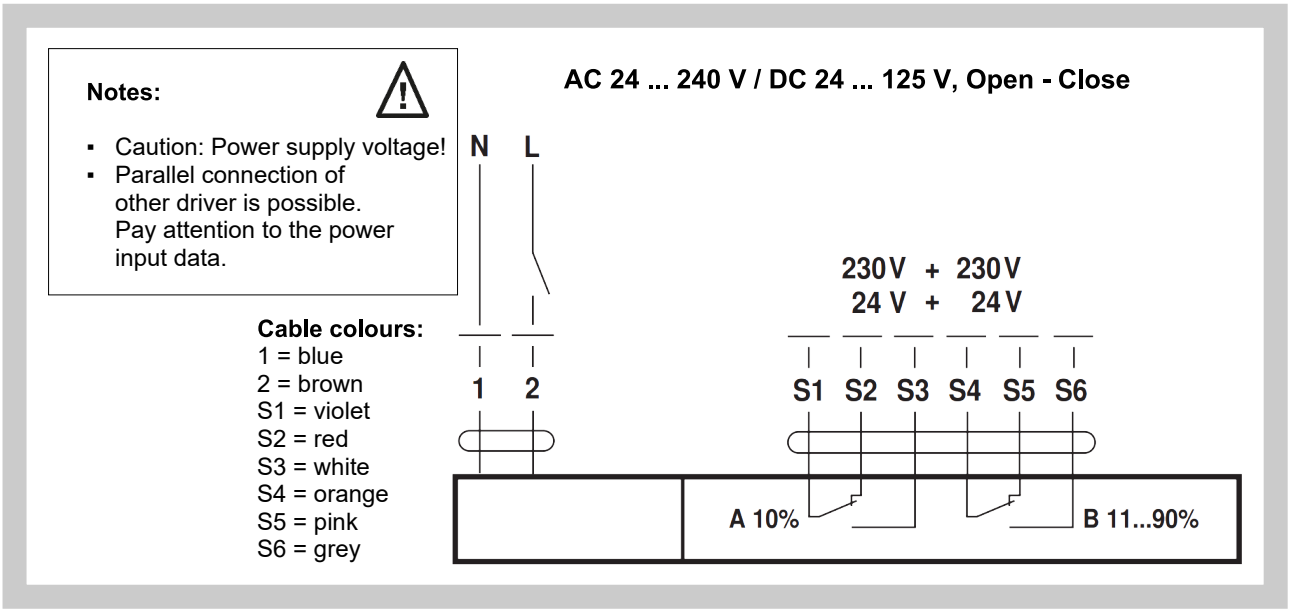

IV. MATERIAL, FINISHING

8. Material

8.1. Standard materials and finishing

Steel body (frame) and blades from DX51+Z275 zinc galvanized sheet metal, damper is delivered without any additional surface treatment. Blade end-plugs from composite material based on PA6 and glass fibres, with halogen-free UV-stabilisation and suppressed flamablity aditives giving V-0 flammability in accordance with UL-94, blade shafts from lead-free mild steel with composite plane bearings. The blade end-cups are with EPDM sliding gaskets with closed pores, with sliding film from PA6.

8.2. Special materials and finishing options

On customer request, the damper may be delivered from stainless steel.

Specification of stainless steel designs – material options:

- A2 – food grade stainless steel (AISI 304 – EN 17240)
- A4 – chemical grade stainless steel with reduced carbon content (AISI 316L – EN 17349)

All metal parts are from the stainless steel, exept for the actuator and eventually, actuator shaft transition part.

On special customer request, blade shaft bearings may be delivered as a compact part from stainless steel, where the composite slide bearing from the standard design will be replaced by stainless steel sliding surface.

Selalings, gaskets, actuator shaft transition parts, actuators, and end-switches are identical for all material options.

Some fasteners are available only in one stainless steel grade, those fasteners will be used in all stainless steel designs.

Other special requirements on materials and/or additional surface treatment will be responded individually.

V. INSPECTION, TESTING

9. Inspection

9.1. Dimensions are checked using regular rulers according to the standard applicable to dimensions without defined tolerances used in the air conditioning trade.

9.2. Intra operational inspections of the parts and main dimensions according to the drawing documentation are performed.

10. Testing

10.1. After assembly, the operation of the blade and of electrical actuators is performed.

VI. PACKING, TRANSPORT AND STORAGE

11. Logistic terms

11.1. The delivery includes a complete damper including the control mechanism.

11.2. The damper are transported as bulk cargo, using suitable covered means of transport. When agreed upon with the manufacturer, the dampers can be loaded onto palettes or wooden crates. Dampers must be protected from mechanical damage during transport and storage.
If packing is used, it is non−returnable and its price is not included in the price of the damper.

11.3. If not otherwise agreed, the handover is considered when the goods is forwarded to the carrier.

11.4. The dampers must be stored in the indoor environment without any aggressive vapours, gases or dust. Indoor temperature must be in the range from -5°C to +40°C and maximum relative humidity 80%. Dampers must be protected against mechanic damages when transported and manipulated.

VII. ORDERING INFORMATION

12. Ordering key

1	2	3	4	5
RDM	300x300	.45	Q30 -	ZN

EXAMPLE:
RDM 300x300 .45 Q30-ZN
Regulation damper RDM, dimension 300x300 mm, with actuator controlled 230 V, two-point control – without position indication, flange dimension 30 mm, galvanized material variant.

1| Regulation damper type - RDM

2| Damper dimensions A x B → see page 5
„A“ is the width of the damper
„B“ is the height of the damper

3| Damper design

.01	Manual control
.09	To fit actuator drive - ready to mount an actuator
.43	Actuator with emergency function 230V - closed without voltage
.45	Actuator controlled 230V, two point regulation - without position signal
.46	Actuator controlled 230V, two point regulation - with position signal
.48	Actuator with emergency function 230V - two point regulation + position signal (2 positions) - closed without voltage
.53	Actuator with emergency function 24V - closed without voltage
.55	Actuator controlled 24V, two point regulation - without position signal
.56	Actuator controlled 24V, two point regulation - with position signal
.57	Actuator controlled 24V SR with smooth regulation
.58	Actuator with emergency function 24V - with position signal (2 positions)

4| Flange dimension

Q20	Flange width 20 mm
Q30	Flange width 30 mm

5| Material and other design options

ZN	Galvanized
A2	Stainless steel 1.4301 (AISI 304)
A4	Stainless steel 1.4404 (AISI 316L)

The producer reserves the right for innovations of the product.
For actual product information see www.mandik.com

MANDÍK®

www.mandik.com

MANDÍK, a.s. • Dobříšská 550 • 267 24 Hostomice • Czech Republic • Tel.: +420 311 706 742 • E-Mail: mandik@mandik.cz