MANDÍK®

TPM 110/15
Version 2026-10-23

SDL

Linear slot diffuser

Technical Documentation
Installation, Commissioning, Operation, Maintenance and Service Manual

MANDÍK®
www.mandik.com

MANDÍK, a.s. • Dobříšská 550 • 267 24 Hostomice • Czech Republic • Tel.: +420 311 706 742 • E-Mail: mandik@mandik.cz

These technical specifications will set all the produced sizes and types of "Linear slot diffusers." They shall apply for manufacturing, design, orders, supplies, mounting, operation and maintenance.

CONTENT

I. GENERAL....3
Description....3
II. DESIGN....4
Examples of plenum box designs....4
III. DIMENSIONS AND WEIGHTS....5
IV. INSTALLATION....7
Placement and installation....7
Installation procedure – solid ceiling construction....8
Without box....8
With box....8
V. TECHNICAL DATA....9
Maximum air flow rates....9
Vertical air flow range....9
Horizontal air flow range....9
Air flow rates ((m³/h)/m)....10
Pressure loss of the SDL outlet....10
Sound power level L_{wA} (dB(A)) of the SDL outlet....10
VI. MATERIAL, FINISHING....11
VII. INSPECTION AND TESTING....11
Inspection....11
Testing....11
VIII. PACKAGING, TRANSPORTATION, STORAGE AND WARRANTY....11
Logistic terms....11
Warranty....11
IX. ASSEMBLY, ATTENDANCE, MAINTENANCE AND FUNCTIONAL CHECKS....11
Assembly and adjustment....11
X. ORDERING INFORMATION....12
Ordering key....12

I. GENERAL

Description

The SDL linear slot diffusers are used in ventilation systems for supply and extract air.

The linear diffusers are available in lengths from 400 mm to 2000 mm in 50 mm increments. The advantage of this type of diffuser is a narrow, flat and uniform air flow along the entire length of the diffuser.

The diffusers consist of a front panel with adjustable blades, which can be supplemented with a plenum box with connection spigots, control dampers and suspension brackets.

The diffusers are intended for environments protected against weather conditions, without condensation, within an air temperature range from -15°C to +45°C and with a maximum relative air humidity of 95%. The air conveyed through the diffuser must be free of abrasive, chemical and sticky impurities.

Unless otherwise specified, all dimensions and weights are given in mm and kg.

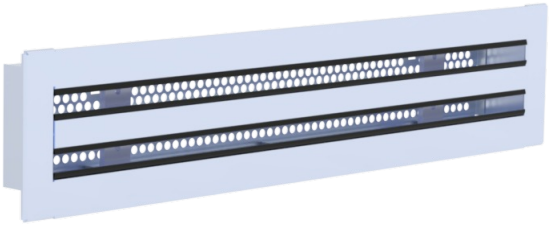

SDL with diffuser plate

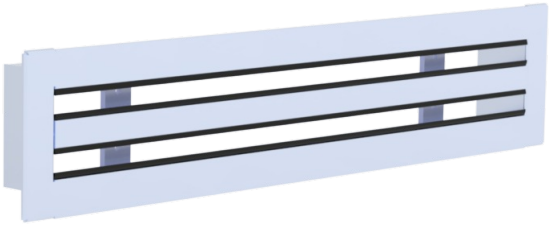

SDL without diffuser plate

II. DESIGN

- The diffuser design is distinguished according to the ordering key.
- The diffuser is available with visible or hidden bolt fixing and with a choice of 1–6 slots.
- The basic length range is from 400 mm to 2000 mm. The diffusers can also be joined together to achieve greater overall lengths.
- The diffuser can be fitted with a diffuser plate to ensure a more optimal distribution of the supply air flow.
- The diffuser can be painted in any RAL colour.
- The plenum box is available in two designs: symmetrical and asymmetrical (L-shaped). The symmetrical design is further divided according to the horizontal or vertical position of the connection nozzle. The nozzle can be fitted with a control damper.

Cross-section of the SDL diffuser with adjustable blades:

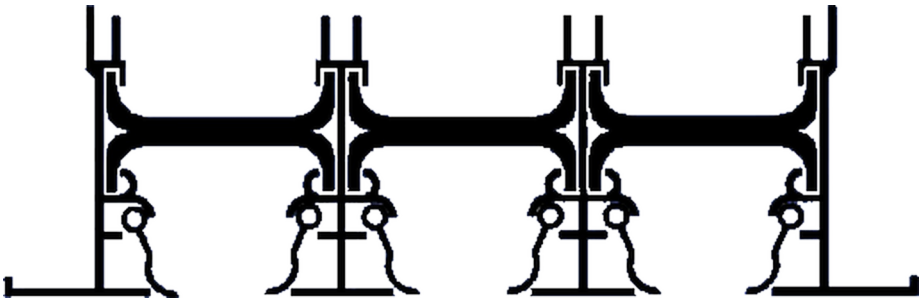

Examples of plenum box designs

Symmetrical horizontal connection

Symmetrical vertical connection

Asymmetrical horizontal connection

III. DIMENSIONS AND WEIGHTS

Standalone diffuser

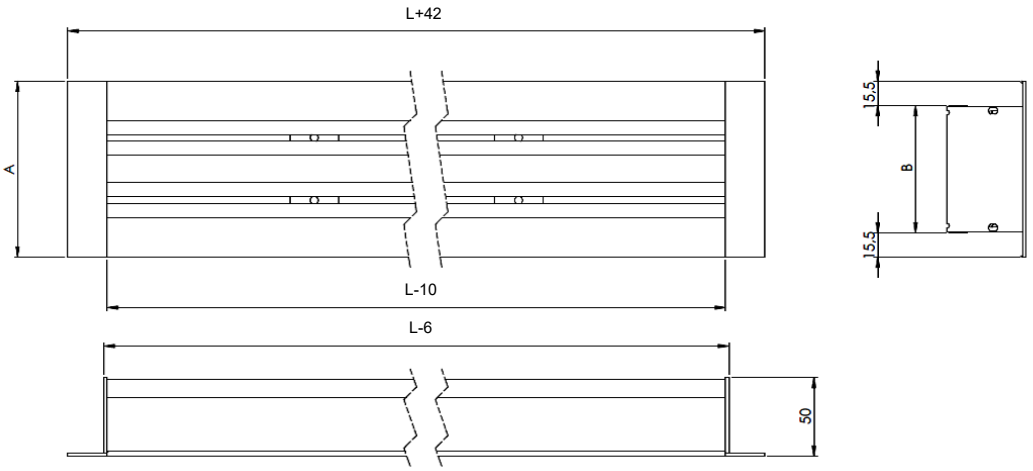

Dimensions of separate air outlets

Type	Number of slots	Free area S_f [m²/m]*	A [mm]	B [mm]	L [mm]	Weight [kg/m]
SDL 1	1	0,012	73	44	400…2000	1
SDL 2	2	0,024	113	83		1,6
SDL 3	3	0,036	152	122		2,3
SDL 4	4	0,048	192	162		3,1
SDL 5	5	0,060	231	200		4
SDL 6	6	0,072	271	240		5,1

** Free area of the outlet is given for the outlet length L=1m and fully open control blades without a diffuser plate.*

Number and size of nozzles according to the length of the SDL

Type	DN	Length L [mm]		
		400-950	1000-1450	1500-2000
SDL 1	125	1	2	2
SDL 2	160			
SDL 3	200			
SDL 4	200			3
SDL 5	250			2
SDL 6	250			

Separate plenum box

Symmetrical horizontal connection

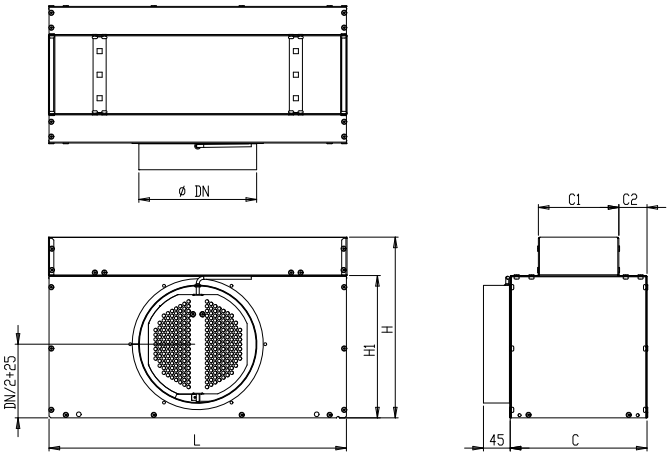

Symmetrical vertical connection

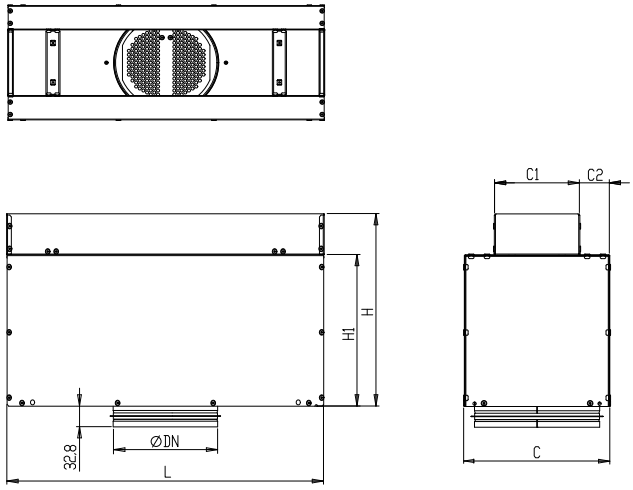

Asymmetrical horizontal connection

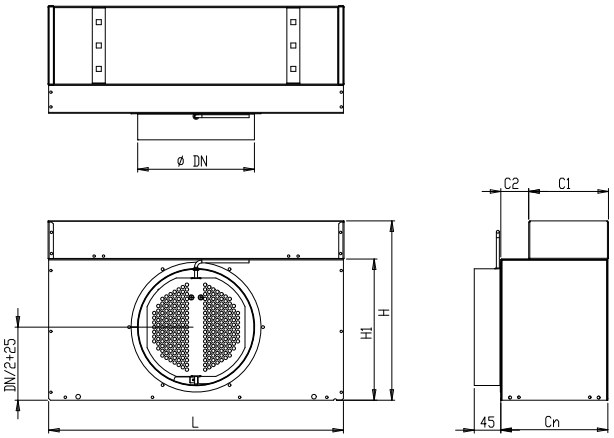

Dimensions of the separate plenum box

Type	DN	H [mm]	H1 [mm]	C [mm]	C1 [mm]	C2 [mm]	Cn [mm]	L [mm]
SDL 1	125	230	165	155	55,5	49,8	105,3	400-2000
SDL 2	160	265	200	190	94,5	47,8	142,3	
SDL 3	200	305	240	230	133,5	48,3	181,8	
SDL 4	200	305	240	230	173,5	28,3	201,8	
SDL 5	250	355	290	280	211,5	34,3	245,8	
SDL 6	250	355	290	280	241,5	19,3	260,8	

Dimension arrangement when assembling SDL into larger units

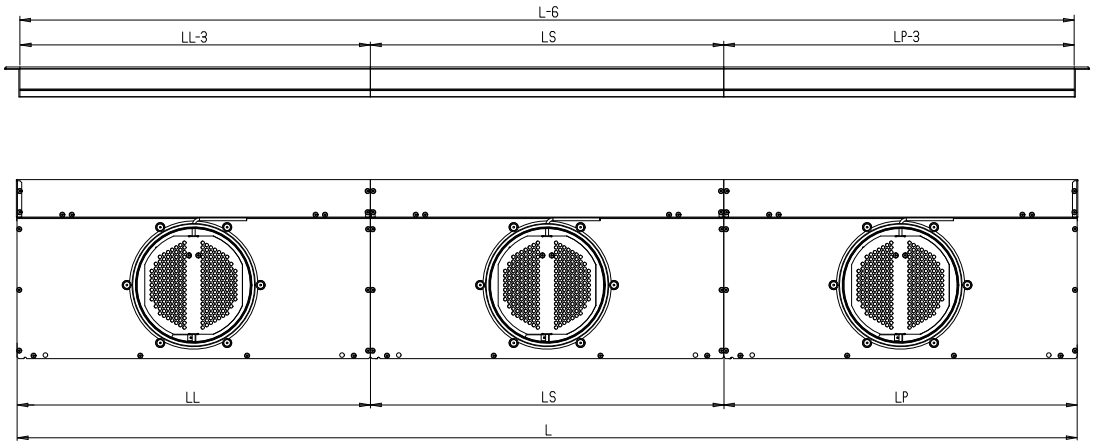

IV. INSTALLATION

Placement and installation

- Primarily, diffusers are designed for embedment into the ceiling. All the technical data and parameters below correspond to this manner of embedment.
- Embedment into a vertical wall, as well as the technical parameters, shall be consulted with the manufacturer - MANDIK, a.s..

Installation example and adjustment of the blades

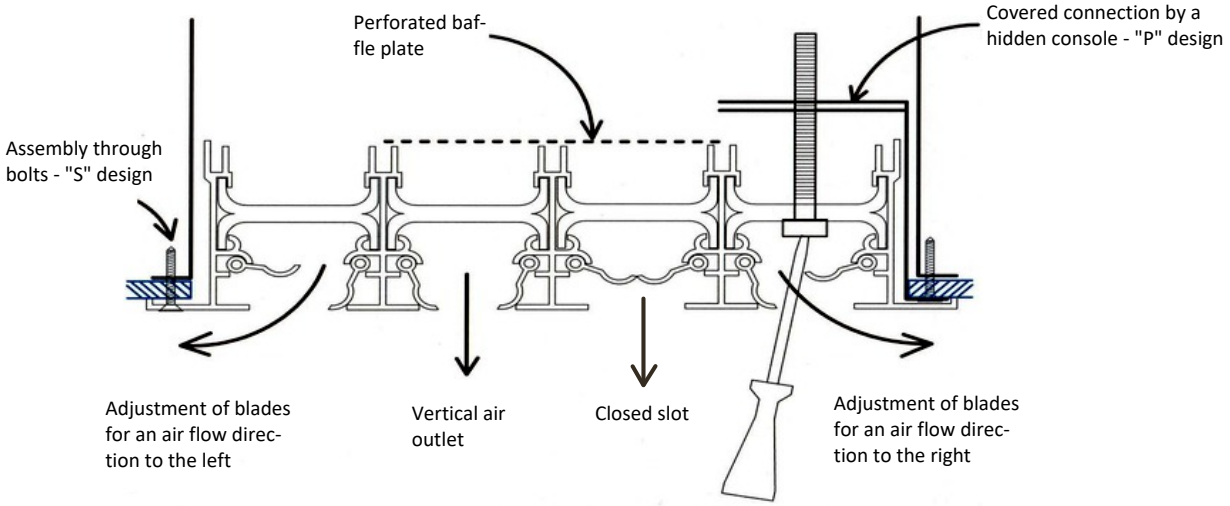

- Slot size within construction structure designed for a front plate connection: **L1 x B1 = (L+3) x (B+4) … in mm**
- Slot size within construction structure designed for a front plate connection with a box: **L1 x B1 = (L+3) x (C1+5) … in mm**
- Construction slot size tolerance: **L1 → -0mm/+2mm; B1 → -0mm/+2mm.**

Installation procedure – solid ceiling construction

Without box

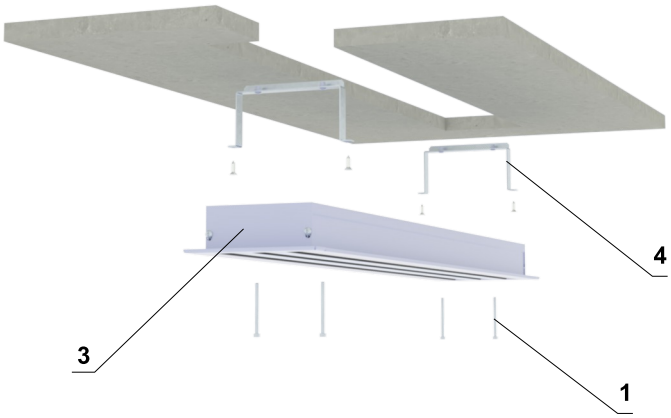

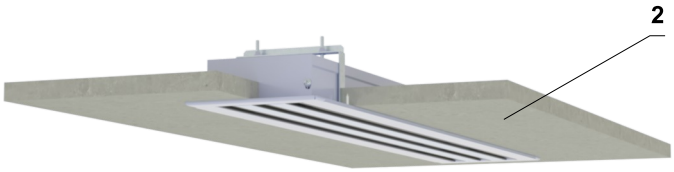

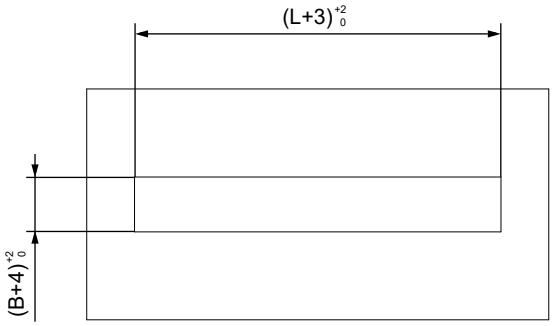

1 Bolt
2 Ceiling structure
3 Diffuser
4 Fixing bracket (bracket for fixing a separate SDL)

Dimensional details → see pages 5 to 6

With box

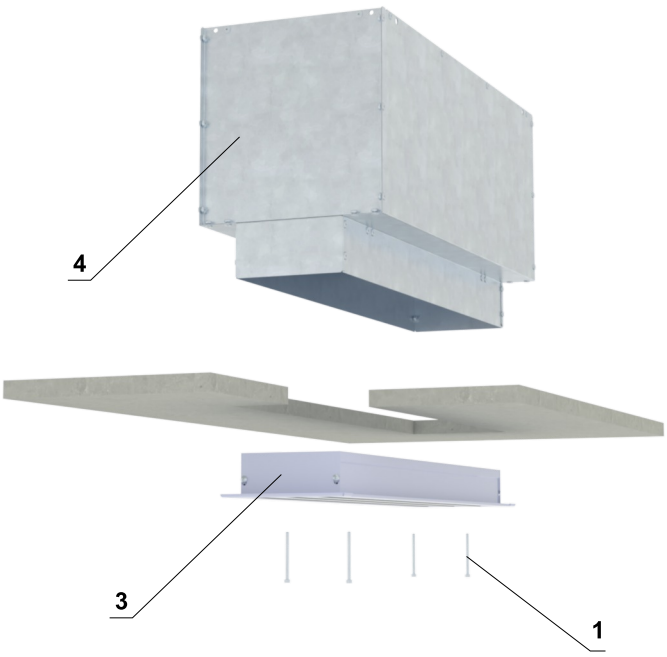

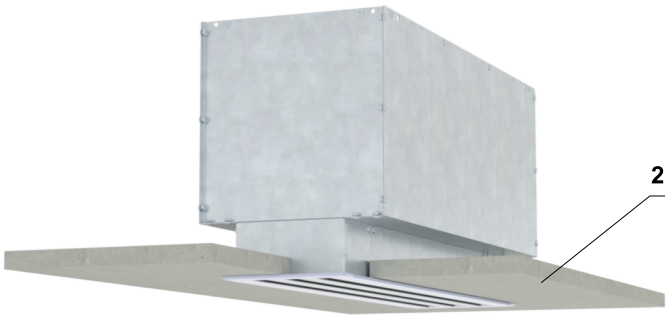

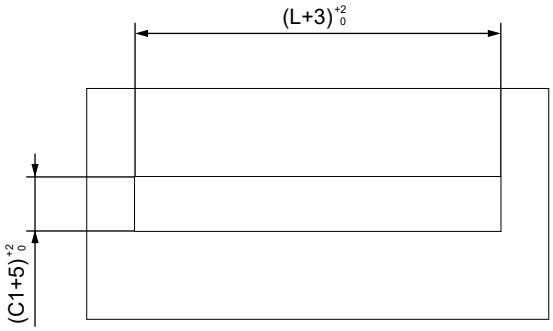

1 Bolt
2 Ceiling structure
3 Diffuser
4 Plenum box

Dimensional details → see pages 5 to 6

V. TECHNICAL DATA

Maximum air flow rates

Diffuser type	V_{max} ((m³/h)/m)
SDL 1	250
SDL 2	430
SDL 3	610
SDL 4	780
SDL 5	950
SDL 6	1100

Vertical air flow range (HEATING mode, Δtp = 15K) for:

- X < 0,3m → YH = 0,6 x B
- 0,3 ≤ X ≤ 1,5m → YH = 0,5 x B
- X > 1,5m → YH = 0,4 x B

B distance - horizontal air flow range (isothermal flow)

Vertical air flow range

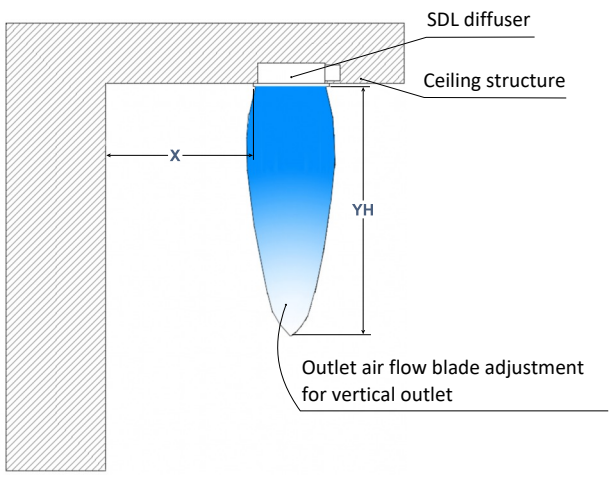

Horizontal air flow range

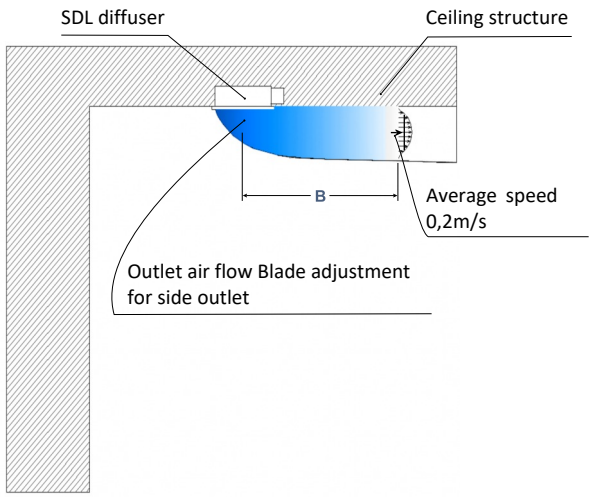

Air flow rates ((m³/h)/m)

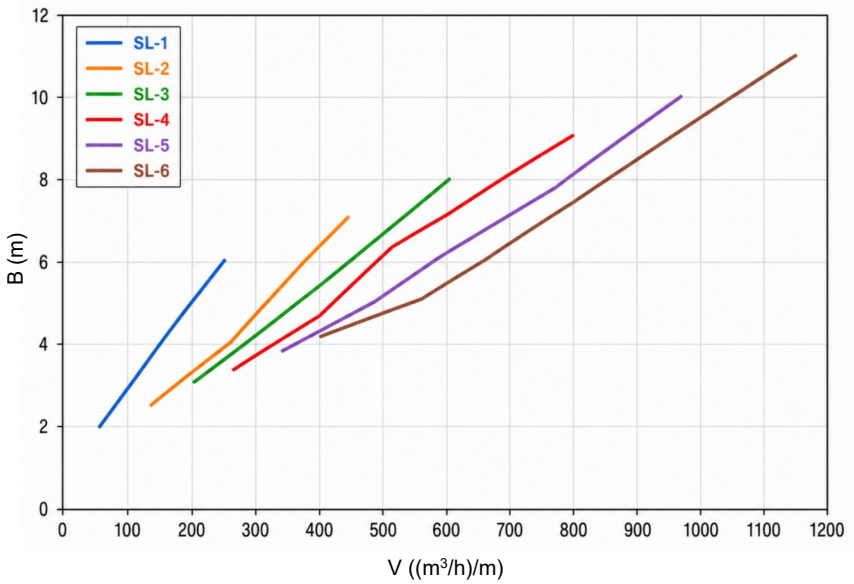

Pressure loss of the SDL outlet

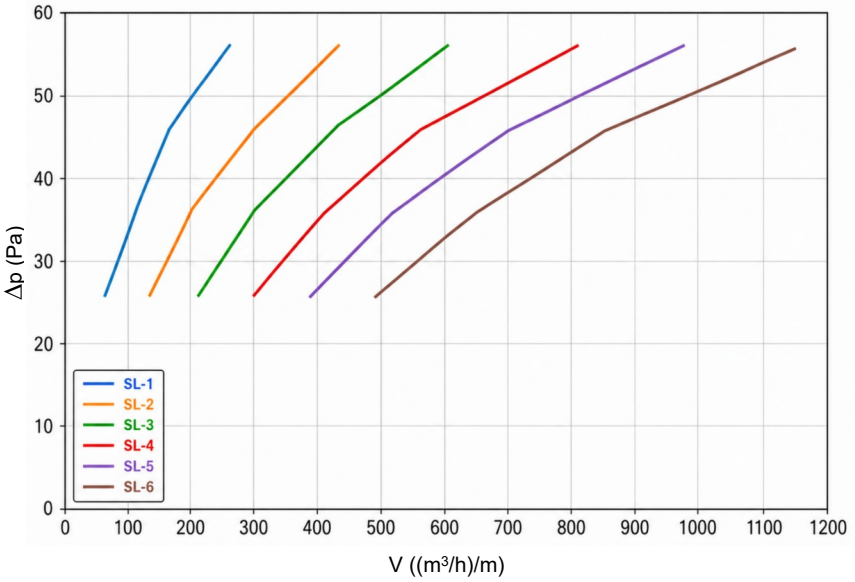

Sound power level L_{wA} (dB(A)) of the SDL outlet

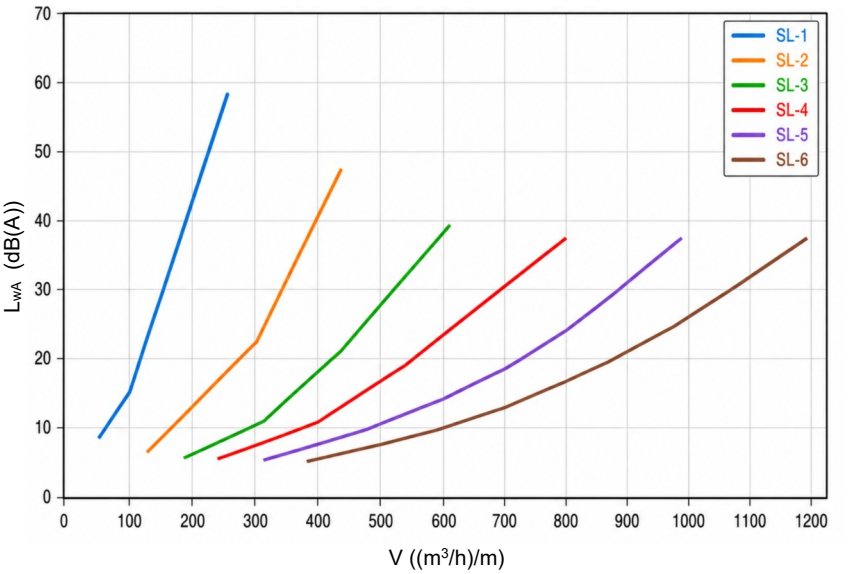

VI. MATERIAL, FINISHING

- The plenum box with a control damper is made of galvanized sheet metal.
- The frame of the SDL front plate is made of an aluminium profile with an anodized surface finish. The SDL frame can be painted in any colour according to the RAL colour chart.
- The adjustable blades are made of black or white plastic.

VII. INSPECTION AND TESTING

Inspection

- After final assembly, the outlet with the plenum box undergoes a final inspection of the quality of workmanship, including verification that the final design complies with the requirements specified in the order.

Testing

- The outlet together with the plenum box does not undergo functional testing as part of the final inspection.

VIII. PACKAGING, TRANSPORTATION, STORAGE AND WARRANTY

Logistic terms

- The outlets are packed individually in cardboard packaging wrapped in shrink film. They are transported as bulk cargo in covered freight vehicles. If the customer wishes, the outlets can be transported on pallets. During handling, transportation and storage, the outlets must be protected against mechanical damage.
- Unless the method of acceptance is specified in the order, handover of the outlet to the carrier shall be considered as acceptance.
- The outlets must be stored in covered premises, in an environment free from aggressive vapours, gases and dust. The temperature in the premises must be maintained within the range of -15°C to +45°C, with a maximum relative humidity of 85%.

Warranty

- The manufacturer provides a 24-month warranty for the outlets from the date of dispatch.
- The warranty becomes void if the outlet is used for purposes, equipment or operating conditions other than those permitted by this standard, or if it is mechanically damaged during handling.
- In the event of damage to the outlet during transport, a damage report must be drawn up with the carrier upon receipt to enable a subsequent claim.

IX. ASSEMBLY, ATTENDANCE, MAINTENANCE AND FUNCTIONAL CHECKS

Assembly and adjustment

- During installation of the SDL outlet in the wall construction, care must be taken to ensure that the front plate is not misaligned or twisted after installation in the ceiling construction.
- After installation of the outlet and completion of construction work in the area where the outlet is installed, the outlet and the plenum box must be cleaned of any dirt accumulated during construction.
- Before commissioning the ventilation system, the plastic outlet blades of the SDL outlet must be adjusted to the position required for the desired direction of the outgoing air stream.
- If the outlet plenum box is equipped with a control damper in the plenum spigot, the required air flow rate through the outlet can be adjusted by turning the damper and securing it in position after adjustment.

X. ORDERING INFORMATION

Ordering key

1	2	3	4	5	6	7	8	9	10	11
SDL	1000	SL4	CO	S	B	P	V	R	L	RAL 9010

EXAMPLES:

SDL 1000 SL6 MI W R

Linear slot diffuser SDL, length 1000 mm, six slots, middle, hidden bolts, white slats, without diffuser plate, RAL 9010 painting, without plenum box.

SDL 1000 SL4 CO S B P V R L RAL 9010

Linear slot diffuser SDL, length 1000 mm, four slots, complete – standalone, visible bolts, black slats, with diffuser plate, symmetrical horizontal connection, with a control damper, with lip seal RAL 9010 painting.

1| Diffuser type – SDL

2| Diffuser length – 400...2000 mm

3|Number of slots

SL1	One slot
SL2	Two slots
SL3	Three slots
SL4	Four slots
SL5	Five slots
SL6	Six slots

4|SDL type

CO	Standalone
SI *	Side / End
MI	Middle

** For designs with a plenum box, it must also be specified whether it is a right or left end section.*

5| Fixing

–	Hidden bolts
S	Visible bolts

6| Slat colour

B	Black
W	White

7|Diffuser plate

–	Without diffuser plate
P	With diffuser plate

8|Plenum box

–	Without plenum box
V	Symmetrical horizontal connection
VL	Asymmetrical horizontal connection
S	Symmetrical vertical connection

9|Control damper

–	Without a control damper
R	With a control damper

10|Lip seal

–	Without lip seal
L	With lip seal

11|Painting

	RAL 9010
RAL XXXX	Painting according to RAL

The producer reserves the right for innovations of the product.
For actual product information see www.mandik.com

MANDÍK®

www.mandik.com

MANDÍK, a.s. • Dobříšská 550 • 267 24 Hostomice • Czech Republic • Tel.: +420 311 706 742 • E-Mail: mandik@mandik.cz