MANDÍK

TPM 087/12
Version 2026-09-18

SEDM

Multi compartment smoke control damper

Technical Documentation
Installation, Commissioning, Operation, Maintenance and Service Manual

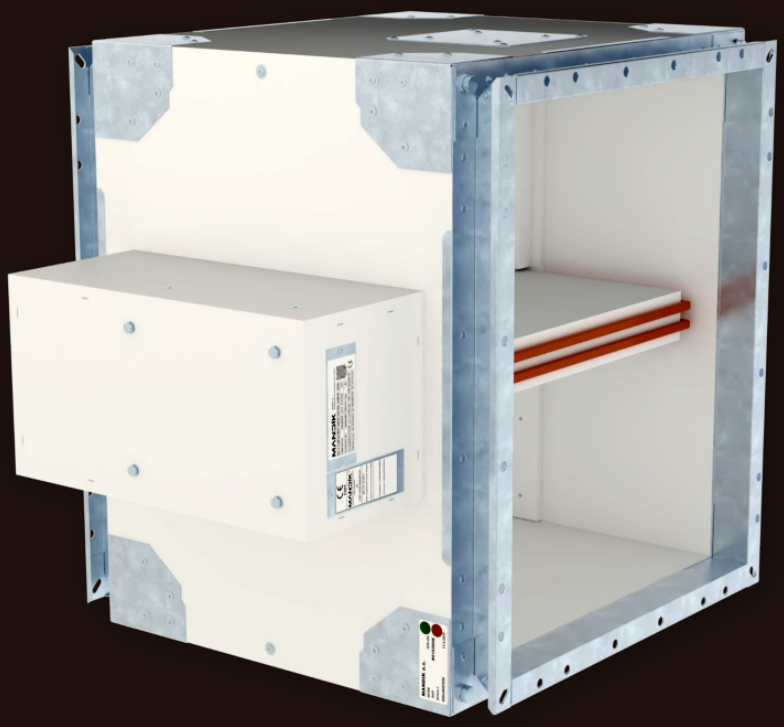

CE 1391

CCPI
ASSESSED PRODUCT INFORMATION
015800192/1227
Smoke Control Dampers

MANDÍK®
www.mandik.com

MANDÍK, a.s. • Dobříšská 550 • 267 24 Hostomice • Czech Republic • Tel.: +420 311 706 742 • E-Mail: mandik@mandik.cz

These technical specifications state a row of manufactured sizes, main dimensions, design and range of use of multi compartment smoke control dampers SEDM.
It is valid for production, design, ordering, delivery, storage, assembly, operation, maintenance and serviceability checks.

CONTENT

I. GENERAL....3
Description....3
II. DESIGN....4
Design with actuating mechanism....4
III. DIMENSIONS....9
Technical parameters....11
IV. INSTALLATION....23
Placement and installation....23
Statement of installations....24
In solid wall construction....25
In gypsum wall construction....31
In solid ceiling construction....34
Installation damper into/onto smoke extraction ducts....37
V. SUSPENSION SYSTEMS....41
Example of duct connection....47
VI. ACCESSORIES....48
VII. TECHNICAL DATA....49
Pressure loss....49
Noise data - level of acoustic output corrected with filter A....51
VIII. MATERIAL, FINISHING....57
IX. TRANSPORTATION, STORAGE AND WARRANTY....57
Logistic terms....57
Warranty....57
X. ASSEMBLY, ATTENDANCE AND MAINTENANCE....57
Electrical connection of the actuator in protection box....58
Entry into service and revisions....59
XI. ORDERING INFORMATION....60
Ordering key....60
Accessories....61
Data label....61

I. GENERAL

Description

Smoke control damper are designed into an inlet or extract smoke ventilation system. The dampers are designed either to close to provide compartmentation or to open (for fresh air inlet) or to allow removal of the heat and combustible products from a fire in the affected fire zone/compartment.

The damper blade is controlled by electrical actuating mechanism.

Dampers are fire resistant and are intended for systems with manual or automatic activation.

Dampers are designed for using in fire compartments that can be connected to the smoke exhaust ducts (tested according to EN 1366-8) or they can be installed in or on the construction of the fire compartment.

Dampers can be delivered with or without flange(s), with cover grille(s).

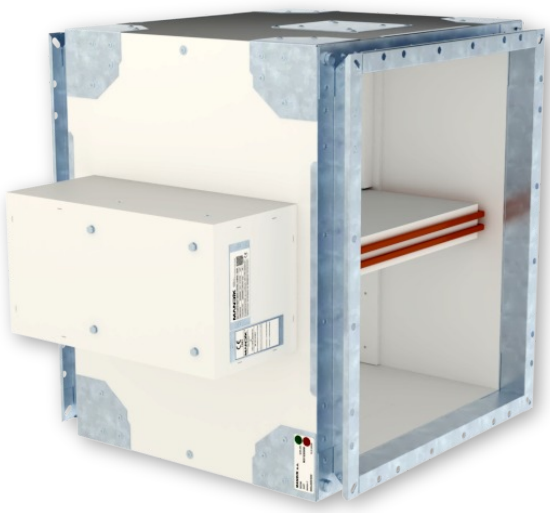

Damper SEDM

Damper characteristics

- CE certified acc. to EN 12101-8
- Tested in accordance with EN 1366-10
- Classified acc. to EN 13501-4
- External Casing leakage class ATC 3 (old marking “C“), Internal leakage min. class 2 acc. to EN 1751
- Cycling test in class C_{mod} acc. to EN 12101-8
- Certificate of constancy of performance No. 1391-CPR-XXXX/XXXX
- Declaration of Perfomance No. PM/SEDM/01/XX/X
- Hygienic assessment - Report No. 1.6/pos/19/19c

Classification of Dampers		
Supporting construction	**Installation type**	**Classification**
Horizontal or vertical smoke extraction ducts tested according to EN 1366-8 or EN 1366-9 ● into/onto the duct	Damper installed into/onto a duct with/without grille	EI120 (h_{od}) S1500[H]C_{mod}HOT400/30MAmulti EI120 (V_{ed}) S1500[V/H]C_{mod}HOT400/30MAmulti
Standard low- and high-density rigid wall construction according to EN 1363-1 ● damper in the wall ● 100 mm min. wall thickness	Mortar or gypsum Ablative Coated Batt Mineral wool and boards	EI 120 (v_{ew}) S1500[V/H]C_{mod}HOT 400/30MAmulti
Standard flexible wall construction, min. EI90. according to EN 1363-1 ● damper in the wall ● 100 mm min. wall thickness	Mortar or gypsum Ablative Coated Batt Mineral wool and boards	EI 120 (v_{ew}) S1500[V/H]C_{mod}HOT 400/30MAmulti
Standard low- and high-density rigid floor construction according to EN 1366-2 ● damper in the floor ● 150 mm min. floor thickness	Mortar or gypsum Ablative Coated Batt Mineral wool and boards	EI 120 (h_{ow}) S1500[H]C_{mod}HOT 400/30MAmulti

Working conditions

- Exact damper function is provided under the following conditions
  - maximum air velocity 15 m/s
  - underpressure max. -1500 Pa or overpressure max. 500 Pa
- Dampers are designed for installation in vertical or horizontal openings of fire separating constructions.
- The damper may be in any position between the position open and closed (those positions included) at the beginning of the risk of fire. Command to close the damper shall be started within 30 seconds from the beginning of the risk of fire; command to open the damper shall be started within 25 minutes from the beginning of the risk of fire.
- Dampers are designed for macroclimatic areas with mild climate according to EN IEC 60 721-3-3 ed.2., class 3K22. (Environment 3K22 is typically protected place with regulated temperature)
- Temperature in the place of installation is permitted to range from -30°C to +50°C.

II. DESIGN

Design with actuating mechanism

Design .44 and .54

- Belimo actuators are used for dampers, series BEN, BEE, BE for 230V AC resp. 24 V AC/DC, Schischek InMax 50.75-S actuators (universal 24V or 230V supply) are used for large size of dampers.
- After connection to the power supply voltage, the actuator moves the damper blade to the "OPEN" position or "CLOSED" (according to the corresponding connection, see wiring diagram). If the power supply is interrupted, the actuator stops at the current position. The signalling of the "OPEN" and "CLOSED" damper blade positions is ensured by two built-in fixed “potential-free” end- limit switches.
- The actuator for operating the damper blade is mounted in an insulated cover/box. It is accessible after removing the cover lid. The electrical connection of the actuator is made with a non-flammable cable (or a cable located in the adjoining cable duct), which passes through an opening made in the wall of the insulated cover/box when installing the damper or when connecting the actuator power cable. Cable penetrations must meet a minimum fire resistance of 30 minutes.

Design .65

- Belimo modulating actuators, BEN (BEE)-SR series for 24V AC/DC are specially designed for remote control of smoke control dampers. The position of the damper blade is adjustable by means of control voltage 0 (2)...10V DC.
- The signalling of the "OPEN" and "CLOSED" damper blade positions is ensured by two built-in fixed “potential-free” limit switches.
- The actuator for operating the damper blade is mounted in an insulated cover/box. It is accessible after removing the cover lid. The electrical connection of the actuator is made with non-flammable cables (or cables located in the adjoining cable duct), which pass through an opening made in the wall of the insulated cover when installing the damper or when connecting the power cables of the actuator. Cable penetrations must meet a minimum fire resistance of 30 minutes.

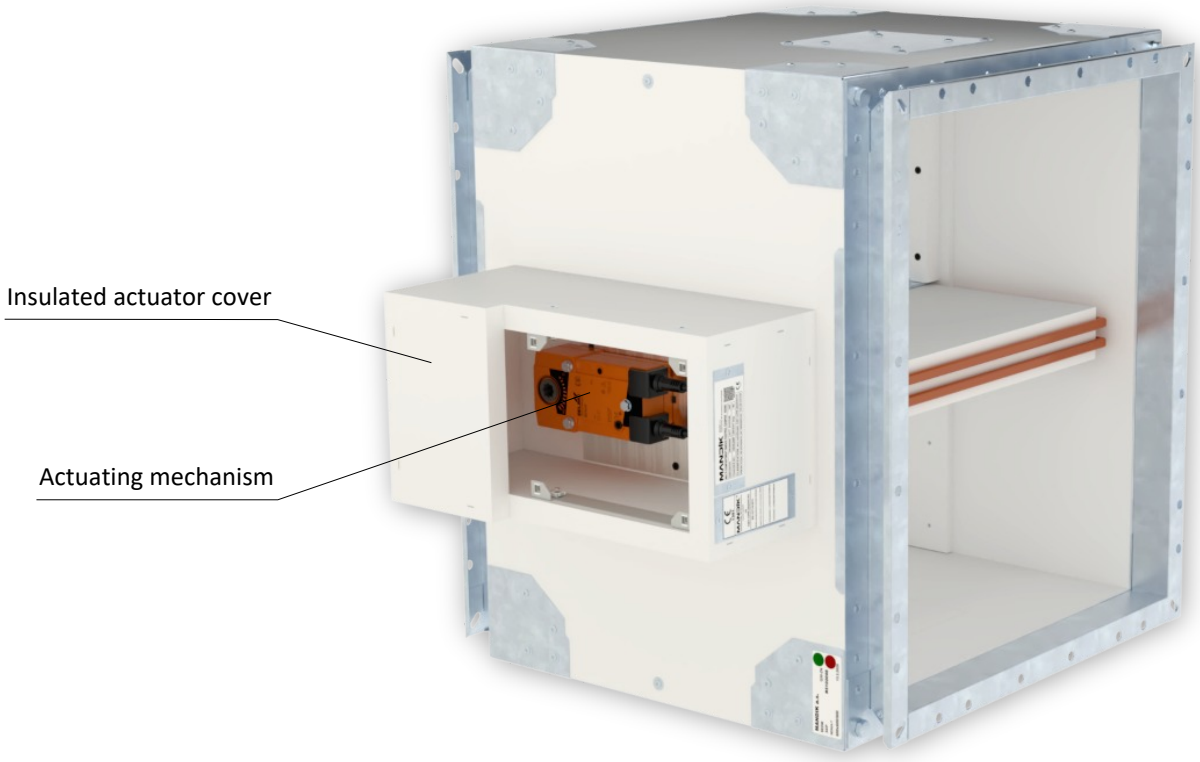

Design .44, .54 and .65

Actuator BELIMO BEN 24(-ST)

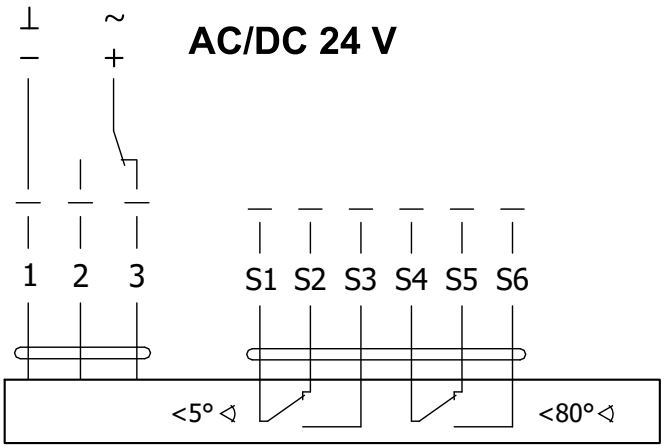

Actuator BELIMO BEN 24-SR

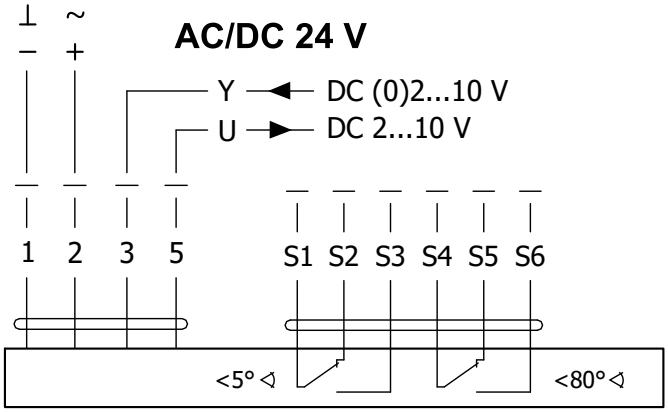

Actuator BELIMO BEN 230

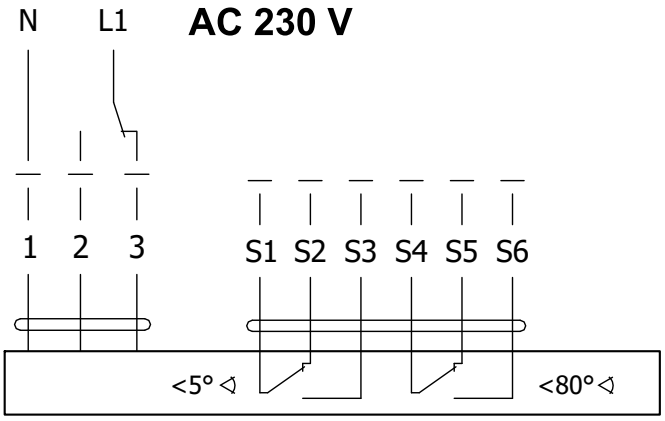

Actuator BELIMO BEN 24(-ST), BEN 24-SR, BEN 230			
Actuator BELIMO - 15 Nm	**BEN 24(-ST)**	**BEN 24-SR***	**BEN 230**
Power voltage	AC/DC 24 V 50/60Hz	AC/DC 24 V 50/60Hz	AC 230 V 50/60Hz
Power consumption - in operation - in the end position	3 W 0,1 W	3 W 0,3 W	4 W 0,4 W
Dimensioning	6 VA (Imax 8,2 A @ 5 ms)	6,5 VA (Imax 8.2 A @ 5 ms)	7 VA (Imax 4 A @ 5 ms)
Protection class	III	III	II
Degree of protection		IP 54	
Adjustment time for 95°		< 30 s	
Ambient temperature Storage temperature		-30°C ... +55°C -40°C ... +80°C	
Connection - drive - auxiliary switch	Cable 1 m, 3 x 0,75 mm² Cable 1 m, 6 x 0,75 mm² (BEN 24-ST) with plug connectors	Cable 1 m, 4 x 0,75 mm² Cable 1 m, 6 x 0,75 mm²	Cable 1 m, 3 x 0,75 mm² Cable 1 m, 6 x 0,75 mm²

* Only available for 24V and selected damper sizes

Actuator BELIMO BEE 24(-ST)

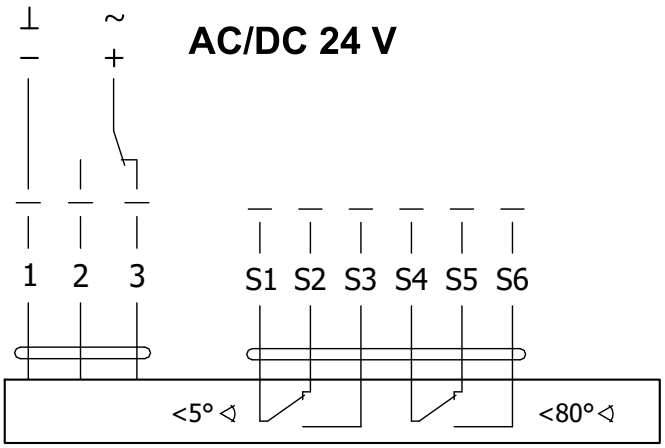

Actuator BELIMO BEE 24-SR

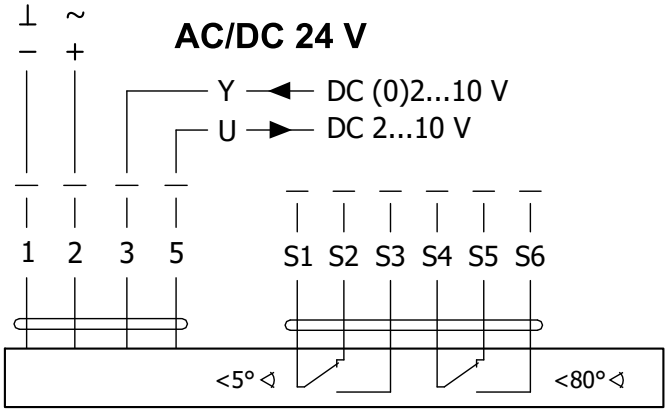

Actuator BELIMO BEE 230

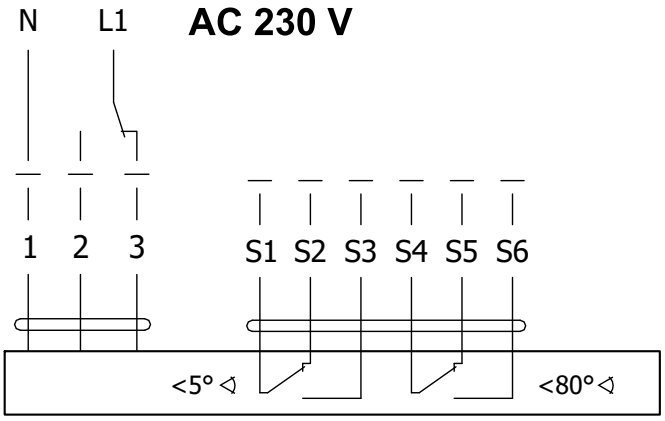

Actuator BELIMO BEE 24(-ST), BEE 24-SR, BEE 230			
Actuator BELIMO - 25 Nm	**BEE 24(-ST)**	**BEE 24-SR***	**BEE 230**
Power voltage	AC/DC 24 V 50/60Hz	AC/DC 24 V 50/60Hz	AC 230 V 50/60Hz
Power consumption - in operation - in the end position	2,5 W 0,1 W	3 W 0,3 W	3,5 W 0,4 W
Dimensioning	5 VA (Imax 8,2 A @ 5 ms)	5,5 VA (Imax 8.2 A @ 5 ms)	6 VA (Imax 4 A @ 5 ms)
Protection class	III	III	II
Degree of protection	IP 54		
Adjustment time for 95°	< 60 s		
Ambient temperature Storage temperature	-30°C ... +55°C -40°C ... +80°C		
Connection - drive - auxiliary switch	Cable 1 m, 3 x 0,75 mm² Cable 1 m, 6 x 0,75 mm² (BEE 24-ST) with plug connectors	Cable 1 m, 4 x 0,75 mm² Cable 1 m, 6 x 0,75 mm²	Cable 1 m, 3 x 0,75 mm² Cable 1 m, 6 x 0,75 mm²

* Only available for 24V and selected damper sizes

Actuator BELIMO BE 24-12(-ST)

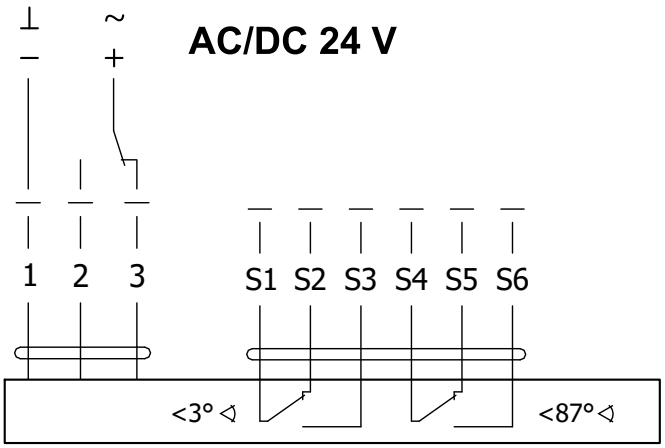

Actuator BELIMO BE 230-12

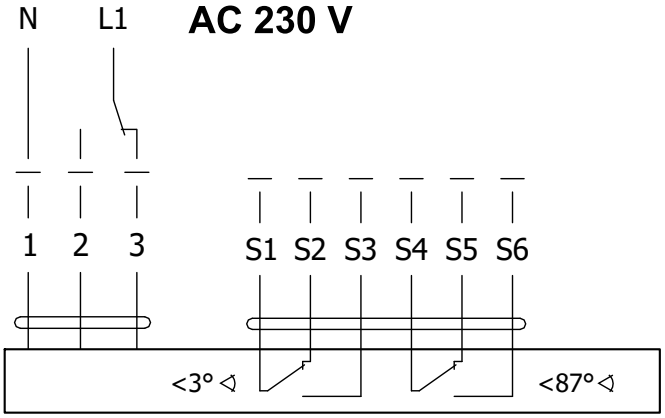

Actuator BELIMO BE 24-12(-ST), BE 230-12		
Actuator BELIMO - 40 Nm	**BE 24-12(-ST)**	**BE 230-12**
Power voltage	AC/DC 24 V 50/60Hz	AC 230 V 50/60Hz
Power consumption - in operation - in the end position	12 W 0,5 W	8 W 0,5 W
Dimensioning	18 VA (Imax 8,2 A @ 5 ms)	15 VA (Imax 7.9 A @ 5 ms)
Protection class	III	II
Degree of protection	IP 54	
Adjustment time for 95°	< 60 s	
Ambient temperature Storage temperature	-30°C … +55°C -40°C … +80°C	
Connection - drive - auxiliary switch	Cable 1 m, 3 x 0,75 mm² Cable 1 m, 6 x 0,75 mm² (BE 24-ST) with plug connectors	

Actuator SCHISCHEK InMax 50.75-S

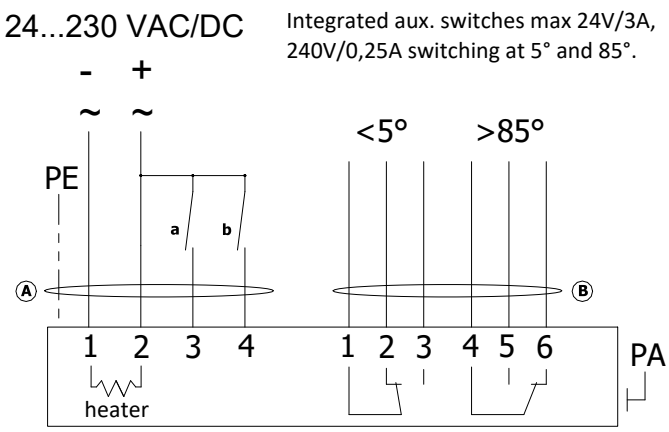

Integrated aux. switches max 24V/3A,
240V/0,25A switching at 5° and 85°.

Actuator SCHISCHEK InMax 50.75-S	
Actuator SCHISCHEK	**InMax 50.75-S**
Power voltage	24-240 VAC/DC 50/60Hz
Power consumption - in operation - heating	10 W 16 W (start at -20°C)
Protection class	I
Degree of protection	IP 66
Adjustment time for 95°	< 60 s
Ambient temperature Storage temperature	-40°C … +50°C -40°C … +70°C
Connection	cable 1 m, 0,5 mm^2

III. DIMENSIONS

SEDM without flange

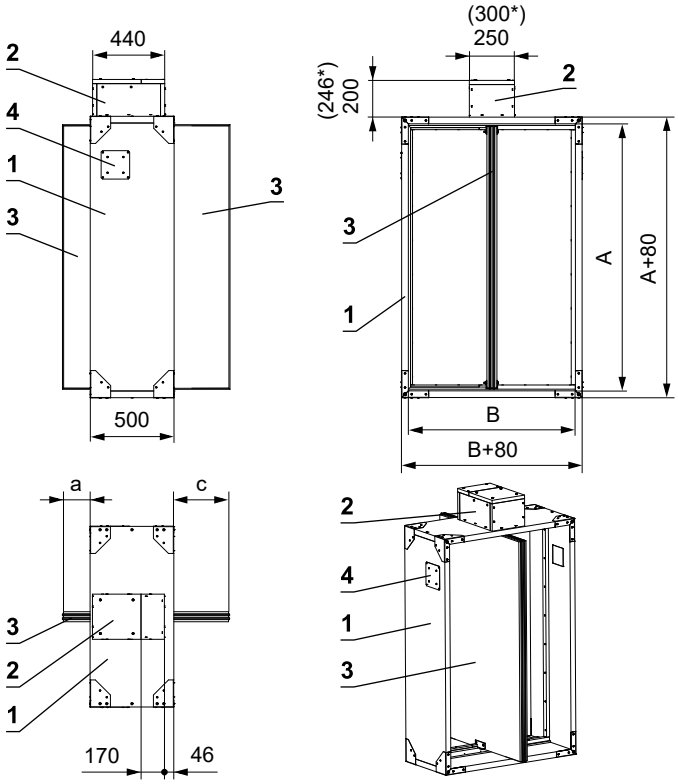

SEDM with flange

- External dimensions of flange A(B) + 60 is not same as external dimensions of damper

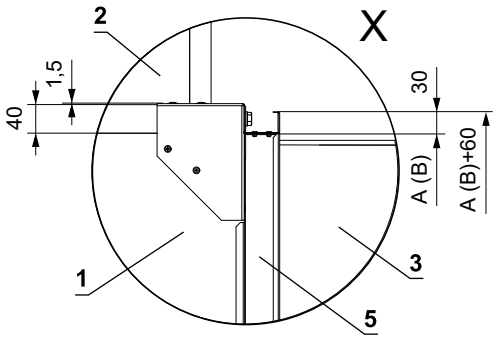

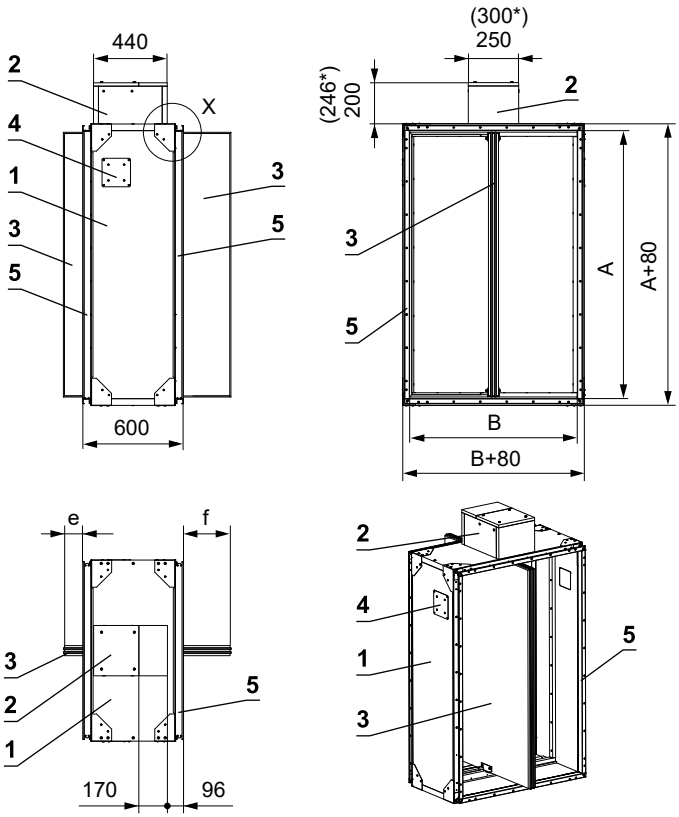

1 SEDM
2 Actuating mechanism
3 Damper blade
4 Inspection opening cover
5 Flange**

* Dimensions with actuating mechanism InMax 50.75S.
** If it is necessary, arbitrary flange could be removed.

Damper blade overlaps

- For damper without flanges the open damper blade overlaps the damper body from dimension B = 250 by the value “c” or “a” and “c”. These values are specified in chapter Technical parameters → see pages 11 to 22.
- For damper with flanges the open damper blade overlaps the damper body from dimension B = 355 by the value “f” or “e” and “f”. These values are specified in chapter Technical parameters → see pages 11 to 22.

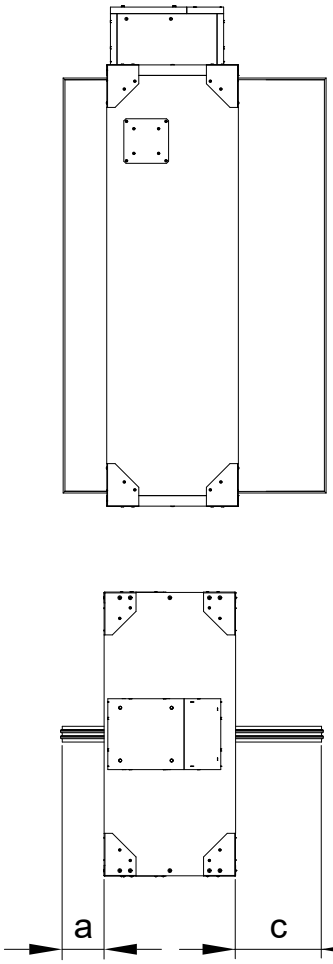

Values “a” and “c” - without flange

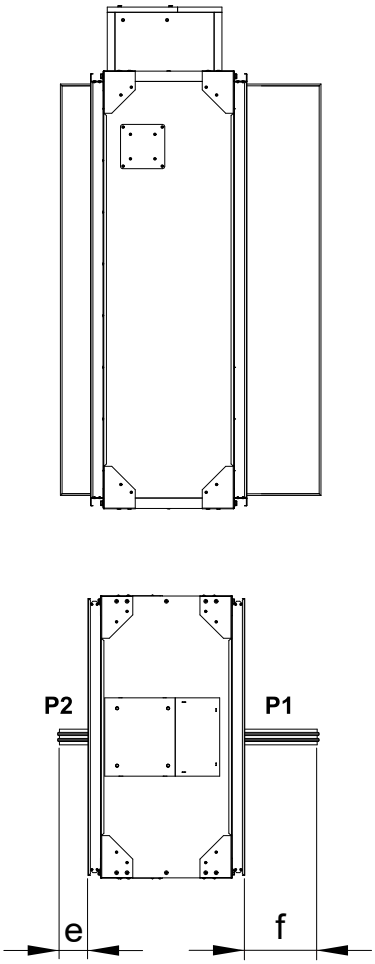

Values “e” and “f” - with flange

Hodnoty "a","c","e" a "f" je nutné respektovat při projekci navazujícího vzduchotechnického potrubí.

Flange of a damper

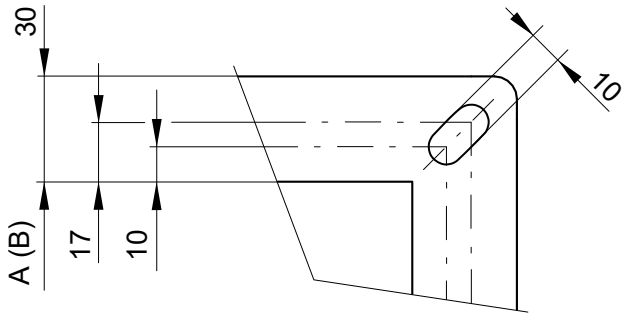

30 mm wide flanges are fitted with oval holes in the corners

Technical parameters

A x B [mm]		Damper blade overlaps without flanges		Damper blade overlaps with flanges		Weight [kg]		Free area S_f [m²]	Actuating mechanism type
		a [mm]	c [mm]	e [mm]	f [mm]	Without flanges	With flanges		
180 x	180	-	-	-	-	30,8	33,1	0,0077	BELIMO BEN (15 N.m)
	200	-	-	-	-	31,4	33,7	0,0099	
	225	-	-	-	-	32	34,4	0,0127	
	250	-	-	-	-	32,7	35,2	0,0154	
	280	-	-	-	-	33,6	36,1	0,0187	
	300	-	-	-	-	34,1	36,6	0,0209	
	315	-	-	-	-	34,5	37,1	0,0226	
	355	-	6,5	-	-	35,6	38,3	0,0270	
	400	-	29	-	-	36,9	39,6	0,0319	
	450	-	54	-	4	38,2	41,1	0,0374	
	500	-	79	-	29	39,6	42,5	0,0429	
	550	-	104	-	54	40,9	44	0,0484	
	560	-	109	-	59	41,2	44,3	0,0495	
	600	-	129	-	79	42,3	45,5	0,0539	
	630	-	144	-	94	43,1	46,3	0,0572	
	650	-	154	-	104	43,6	46,9	0,0594	
	700	11	179	-	129	45	48,4	0,0649	
	710	16	184	-	134	45,2	48,7	0,0660	
	750	36	204	-	154	46,3	49,8	0,0704	
	800	61	229	11	179	47,7	51,3	0,0759	BELIMO BEE (25 N.m)
	900	111	279	61	229	50,3	54,1	0,0869	
	1000	161	329	111	279	53	57	0,0979	
200 x	180	-	-	-	-	31,4	33,7	0,0091	BELIMO BEN (15 N.m)
	200	-	-	-	-	32	34,3	0,0117	
	225	-	-	-	-	32,7	35,2	0,0150	
	250	-	-	-	-	33,5	36	0,0182	
	280	-	-	-	-	34,4	37	0,0221	
	300	-	-	-	-	35	37,6	0,0247	
	315	-	-	-	-	35,5	38,1	0,0267	
	355	-	6,5	-	-	36,7	39,4	0,0319	
	400	-	29	-	-	38,1	40,9	0,0377	
	450	-	54	-	4	39,6	42,5	0,0442	
	500	-	79	-	29	41,1	44,2	0,0507	
	550	-	104	-	54	42,6	45,8	0,0572	
	560	-	109	-	59	42,9	46,1	0,0585	
	600	-	129	-	79	44,1	47,4	0,0637	
	630	-	144	-	94	45	48,4	0,0676	
	650	-	154	-	104	45,6	49	0,0702	
	700	11	179	-	129	47,1	50,6	0,0767	
	710	16	184	-	134	47,4	50,9	0,0780	
	750	36	204	-	154	48,5	52,2	0,0832	
	800	61	229	11	179	50	53,8	0,0897	BELIMO BEE (25 N.m)
	900	111	279	61	229	53	57	0,1027	
	1000	161	329	111	279	55,9	60,1	0,1157	
225 x	180	-	-	-	-	32	34,4	0,0109	BELIMO BEN (15 N.m)
	200	-	-	-	-	32,7	35,2	0,0140	
	225	-	-	-	-	33,6	36,1	0,0178	
	250	-	-	-	-	34,5	37	0,0217	
	280	-	-	-	-	35,5	38,1	0,0264	
	300	-	-	-	-	36,2	38,9	0,0295	
	315	-	-	-	-	36,7	39,4	0,0318	
	355	-	6,5	-	-	38	40,9	0,0380	

A x B [mm]		Damper blade overlaps without flanges		Damper blade overlaps with flanges		Weight [kg]		Free area S_f [m²]	Actuating mechanism type
		a [mm]	c [mm]	e [mm]	f [mm]	Without flanges	With flanges		
225 x	400	-	29	-	-	39,6	42,5	0,0450	BELIMO BEN (15 N.m)
	450	-	54	-	4	41,3	44,4	0,0527	
	500	-	79	-	29	43	46,2	0,0605	
	550	-	104	-	54	44,6	48	0,0682	
	560	-	109	-	59	45	48,4	0,0698	
	600	-	129	-	79	46,3	49,8	0,0760	
	630	-	144	-	94	47,3	50,9	0,0806	
	650	-	154	-	104	48	51,6	0,0837	
	700	11	179	-	129	49,7	53,4	0,0915	
	710	16	184	-	134	50	53,8	0,0930	
	750	36	204	-	154	51,3	55,2	0,0992	
	800	61	229	11	179	53	57	0,1070	BELIMO BEE (25 N.m)
	900	111	279	61	229	56,2	60,5	0,1225	
	1000	161	329	111	279	59,5	64	0,1380	
250 x	180	-	-	-	-	32,7	35,2	0,0126	BELIMO BEN (15 N.m)
	200	-	-	-	-	33,5	36	0,0162	
	225	-	-	-	-	34,5	37	0,0207	
	250	-	-	-	-	35,4	38	0,0252	
	280	-	-	-	-	36,6	39,3	0,0306	
	300	-	-	-	-	37,3	40,1	0,0342	
	315	-	-	-	-	37,9	40,7	0,0369	
	355	-	6,5	-	-	39,4	42,3	0,0441	
	400	-	29	-	-	41,1	44,2	0,0522	
	450	-	54	-	4	43	46,2	0,0612	
	500	-	79	-	29	44,8	48,2	0,0702	
	550	-	104	-	54	46,7	50,2	0,0792	
	560	-	109	-	59	47,1	50,6	0,0810	
	600	-	129	-	79	48,5	52,2	0,0882	
	630	-	144	-	94	49,7	53,4	0,0936	
	650	-	154	-	104	50,4	54,2	0,0972	
	700	11	179	-	129	52,2	56,2	0,1062	
	710	16	184	-	134	52,6	56,6	0,1080	
	750	36	204	-	154	54,1	58,1	0,1152	
	800	61	229	11	179	55,9	60,1	0,1242	BELIMO BEE (25 N.m)
	900	111	279	61	229	59,5	64	0,1422	
	1000	161	329	111	279	63,1	67,9	0,1602	
280 x	180	-	-	-	-	33,6	36,1	0,0147	BELIMO BEN (15 N.m)
	200	-	-	-	-	34,4	37	0,0189	
	225	-	-	-	-	35,5	38,1	0,0242	
	250	-	-	-	-	36,6	39,3	0,0294	
	280	-	-	-	-	37,8	40,7	0,0357	
	300	-	-	-	-	38,7	41,6	0,0399	
	315	-	-	-	-	39,3	42,3	0,0431	
	355	-	6,5	-	-	41	44,1	0,0515	
	400	-	29	-	-	42,9	46,1	0,0609	
	450	-	54	-	4	45	48,4	0,0714	
	500	-	79	-	29	47,1	50,6	0,0819	
	550	-	104	-	54	49,1	52,8	0,0924	
	560	-	109	-	59	49,5	53,3	0,0945	
	600	-	129	-	79	51,2	55,1	0,1029	
	630	-	144	-	94	52,4	56,4	0,1092	

A x B [mm]		Damper blade overlaps without flanges		Damper blade overlaps with flanges		Weight [kg]		Free area S_f [m²]	Actuating mechanism type
		a [mm]	c [mm]	e [mm]	f [mm]	Without flanges	With flanges		
280 x	650	-	154	-	104	53,3	57,3	0,1134	BELIMO BEN (15 N.m)
	700	11	179	-	129	55,3	59,5	0,1239	
	710	16	184	-	134	55,7	59,9	0,1260	
	750	36	204	-	154	57,3	61,7	0,1344	
	800	61	229	11	179	59,4	63,8	0,1449	BELIMO BEE (25 N.m)
	900	111	279	61	229	63,4	68,2	0,1659	
	1000	161	329	111	279	67,3	72,4	0,1869	
300 x	180	-	-	-	-	34,1	36,6	0,0161	BELIMO BEN (15 N.m)
	200	-	-	-	-	35	37,6	0,0207	
	225	-	-	-	-	36,2	38,9	0,0265	
	250	-	-	-	-	37,3	40,1	0,0322	
	280	-	-	-	-	38,7	41,6	0,0391	
	300	-	-	-	-	39,6	42,5	0,0437	
	315	-	-	-	-	40,3	43,3	0,0472	
	355	-	6,5	-	-	42,1	45,2	0,0564	
	400	-	29	-	-	44,1	47,4	0,0667	
	450	-	54	-	4	46,3	49,8	0,0782	
	500	-	79	-	29	48,5	52,2	0,0897	
	550	-	104	-	54	50,8	54,6	0,1012	
	560	-	109	-	59	51,2	55,1	0,1035	
	600	-	129	-	79	53	57	0,1127	
	630	-	144	-	94	54,3	58,4	0,1196	
	650	-	154	-	104	55,1	59,3	0,1242	
	700	11	179	-	129	57,3	61,7	0,1357	
	710	16	184	-	134	57,8	62,1	0,1380	
	750	36	204	-	154	59,5	64	0,1472	
	800	61	229	11	179	61,7	66,3	0,1587	BELIMO BEE (25 N.m)
	900	111	279	61	229	65,9	70,9	0,1817	
	1000	161	329	111	279	70,2	75,5	0,2047	
315 x	180	-	-	-	-	34,5	37,1	0,0172	BELIMO BEN (15 N.m)
	200	-	-	-	-	35,5	38,1	0,0221	
	225	-	-	-	-	36,7	39,4	0,0282	
	250	-	-	-	-	37,9	40,7	0,0343	
	280	-	-	-	-	39,3	42,3	0,0417	
	300	-	-	-	-	40,3	43,3	0,0466	
	315	-	-	-	-	41	44	0,0502	
	355	-	6,5	-	-	42,9	46,1	0,0600	
	400	-	29	-	-	45	48,4	0,0711	
	450	-	54	-	4	47,3	50,9	0,0833	
	500	-	79	-	29	49,7	53,4	0,0956	
	550	-	104	-	54	52	55,9	0,1078	
	560	-	109	-	59	52,4	56,4	0,1103	
	600	-	129	-	79	54,3	58,4	0,1201	
	630	-	144	-	94	55,7	59,9	0,1274	
	650	-	154	-	104	56,6	60,8	0,1323	
	700	11	179	-	129	58,8	63,3	0,1446	
	710	16	184	-	134	59,3	63,8	0,1470	
	750	36	204	-	154	61,1	65,7	0,1568	
	800	61	229	11	179	63,4	68,2	0,1691	BELIMO BEE (25 N.m)
	900	111	279	61	229	67,8	73	0,1936	
	1000	161	329	111	279	72,3	77,7	0,2181	

A x B [mm]		Damper blade overlaps without flanges		Damper blade overlaps with flanges		Weight [kg]		Free area S_f [m²]	Actuating mechanism type
		a [mm]	c [mm]	e [mm]	f [mm]	Without flanges	With flanges		
355 x	180	-	-	-	-	35,6	38,3	0,0200	BELIMO BEN (15 N.m)
	200	-	-	-	-	36,7	39,4	0,0257	
	225	-	-	-	-	38	40,9	0,0328	
	250	-	-	-	-	39,4	42,3	0,0399	
	280	-	-	-	-	41	44,1	0,0485	
	300	-	-	-	-	42,1	45,2	0,0542	
	315	-	-	-	-	42,9	46,1	0,0584	
	355	-	6,5	-	-	45	48,4	0,0698	
	400	-	29	-	-	47,4	50,9	0,0827	
	450	-	54	-	4	50	53,8	0,0969	
	500	-	79	-	29	52,6	56,6	0,1112	
	550	-	104	-	54	55,2	59,4	0,1254	
	560	-	109	-	59	55,7	59,9	0,1283	
	600	-	129	-	79	57,8	62,1	0,1397	
	630	-	144	-	94	59,3	63,8	0,1482	
	650	-	154	-	104	60,3	64,9	0,1539	
	700	11	179	-	129	62,9	67,6	0,1682	
	710	16	184	-	134	63,4	68,2	0,1710	
	750	36	204	-	154	65,4	70,3	0,1824	
	800	61	229	11	179	67,9	73	0,1967	BELIMO BEE (25 N.m)
	900	111	279	61	229	72,9	78,4	0,2252	
	1000	161	329	111	279	77,8	83,7	0,2537	
400 x	180	-	-	-	-	36,9	39,6	0,0231	BELIMO BEN (15 N.m)
	200	-	-	-	-	38,1	40,9	0,0297	
	225	-	-	-	-	39,6	42,5	0,0380	
	250	-	-	-	-	41,1	44,2	0,0462	
	280	-	-	-	-	42,9	46,1	0,0561	
	300	-	-	-	-	44,1	47,4	0,0627	
	315	-	-	-	-	45	48,4	0,0677	
	355	-	6,5	-	-	47,4	50,9	0,0809	
	400	-	29	-	-	50	53,8	0,0957	
	450	-	54	-	4	53	57	0,1122	
	500	-	79	-	29	55,9	60,1	0,1287	
	550	-	104	-	54	58,8	63,2	0,1452	
	560	-	109	-	59	59,4	63,8	0,1485	
	600	-	129	-	79	61,7	66,3	0,1617	
	630	-	144	-	94	63,4	68,2	0,1716	
	650	-	154	-	104	64,5	69,4	0,1782	
	700	11	179	-	129	67,3	72,4	0,1947	
	710	16	184	-	134	67,9	73	0,1980	
	750	36	204	-	154	70,2	75,5	0,2112	
	800	61	229	11	179	73	78,5	0,2277	BELIMO BEE (25 N.m)
	900	111	279	61	229	78,5	84,4	0,2607	
	1000	161	329	111	279	84	90,2	0,2937	
450 x	180	-	-	-	-	38,2	41,1	0,0266	BELIMO BEN (15 N.m)
	200	-	-	-	-	39,6	42,5	0,0342	
	225	-	-	-	-	41,3	44,4	0,0437	
	250	-	-	-	-	43	46,2	0,0532	
	280	-	-	-	-	45	48,4	0,0646	
	300	-	-	-	-	46,3	49,8	0,0722	
	315	-	-	-	-	47,3	50,9	0,0779	

A x B [mm]		Damper blade overlaps without flanges		Damper blade overlaps with flanges		Weight [kg]		Free area S_f [m²]	Actuating mechanism type
		a [mm]	c [mm]	e [mm]	f [mm]	Without flanges	With flanges		
450 x	355	-	6,5	-	-	50	53,8	0,0931	BELIMO BEN (15 N.m)
	400	-	29	-	-	53	57	0,1102	
	450	-	54	-	4	56,2	60,5	0,1292	
	500	-	79	-	29	59,5	64	0,1482	
	550	-	104	-	54	62,7	67,5	0,1672	
	560	-	109	-	59	63,4	68,2	0,1710	
	600	-	129	-	79	65,9	70,9	0,1862	
	630	-	144	-	94	67,8	73	0,1976	
	650	-	154	-	104	69,1	74,3	0,2052	
	700	11	179	-	129	72,3	77,7	0,2242	
	710	16	184	-	134	72,9	78,4	0,2280	
	750	36	204	-	154	75,4	81,1	0,2432	
	800	61	229	11	179	78,5	84,4	0,2622	BELIMO BEE (25 N.m)
	900	111	279	61	229	84,6	91	0,3002	
	1000	161	329	111	279	90,7	97,4	0,3382	
500 x	180	-	-	-	-	39,6	42,5	0,0301	BELIMO BEN (15 N.m)
	200	-	-	-	-	41,1	44,2	0,0387	
	225	-	-	-	-	43	46,2	0,0495	
	250	-	-	-	-	44,8	48,2	0,0602	
	280	-	-	-	-	47,1	50,6	0,0731	
	300	-	-	-	-	48,5	52,2	0,0817	
	315	-	-	-	-	49,7	53,4	0,0882	
	355	-	6,5	-	-	52,6	56,6	0,1054	
	400	-	29	-	-	55,9	60,1	0,1247	
	450	-	54	-	4	59,5	64	0,1462	
	500	-	79	-	29	63,1	67,9	0,1677	
	550	-	104	-	54	66,6	71,7	0,1892	
	560	-	109	-	59	67,3	72,4	0,1935	
	600	-	129	-	79	70,2	75,5	0,2107	
	630	-	144	-	94	72,3	77,7	0,2236	
	650	-	154	-	104	73,7	79,2	0,2322	
	700	11	179	-	129	77,1	82,9	0,2537	
	710	16	184	-	134	77,8	83,7	0,2580	
	750	36	204	-	154	80,6	86,6	0,2752	
	800	61	229	11	179	84	90,2	0,2967	BELIMO BEE (25 N.m)
	900	111	279	61	229	90,7	97,4	0,3397	
	1000	161	329	111	279	97,2	104,4	0,3827	
550 x	180	-	-	-	-	40,9	44	0,0336	BELIMO BEN (15 N.m)
	200	-	-	-	-	42,6	45,8	0,0432	
	225	-	-	-	-	44,6	48	0,0552	
	250	-	-	-	-	46,7	50,2	0,0672	
	280	-	-	-	-	49,1	52,8	0,0816	
	300	-	-	-	-	50,8	54,6	0,0912	
	315	-	-	-	-	52	55,9	0,0984	
	355	-	6,5	-	-	55,2	59,4	0,1176	
	400	-	29	-	-	58,8	63,2	0,1392	
	450	-	54	-	4	62,7	67,5	0,1632	
	500	-	79	-	29	66,6	71,7	0,1872	
	550	-	104	-	54	70,5	75,8	0,2112	
	560	-	109	-	59	71,3	76,7	0,2160	
	600	-	129	-	79	74,4	80	0,2352	

A x B [mm]		Damper blade overlaps without flanges		Damper blade overlaps with flanges		Weight [kg]		Free area S_f [m²]	Actuating mechanism type
		a [mm]	c [mm]	e [mm]	f [mm]	Without flanges	With flanges		
550 x	630	-	144	-	94	76,6	82,4	0,2496	BELIMO BEN (15 N.m)
	650	-	154	-	104	78,2	84	0,2592	
	700	11	179	-	129	81,9	88,1	0,2832	
	710	16	184	-	134	82,7	88,9	0,2880	
	750	36	204	-	154	85,6	92	0,3072	
	800	61	229	11	179	89,3	96	0,3312	BELIMO BEE (25 N.m)
	900	111	279	61	229	96,6	103,7	0,3792	
	1000	161	329	111	279	103,7	111,3	0,4272	BELIMO BE (40 N.m)
560 x	180	-	-	-	-	41,2	44,3	0,0343	BELIMO BEN (15 N.m)
	200	-	-	-	-	42,9	46,1	0,0441	
	225	-	-	-	-	45	48,4	0,0564	
	250	-	-	-	-	47,1	50,6	0,0686	
	280	-	-	-	-	49,5	53,3	0,0833	
	300	-	-	-	-	51,2	55,1	0,0931	
	315	-	-	-	-	52,4	56,4	0,1005	
	355	-	6,5	-	-	55,7	59,9	0,1201	
	400	-	29	-	-	59,4	63,8	0,1421	
	450	-	54	-	4	63,4	68,2	0,1666	
	500	-	79	-	29	67,3	72,4	0,1911	
	550	-	104	-	54	71,3	76,7	0,2156	
	560	-	109	-	59	72,1	77,5	0,2205	
	600	-	129	-	79	75,2	80,8	0,2401	
	630	-	144	-	94	77,5	83,3	0,2548	
	650	-	154	-	104	79,1	85	0,2646	
	700	11	179	-	129	82,9	89,1	0,2891	
	710	16	184	-	134	83,6	89,9	0,2940	
	750	36	204	-	154	86,7	93,1	0,3136	BELIMO BEE (25 N.m)
	800	61	229	11	179	90,4	97,1	0,3381	
	900	111	279	61	229	97,8	105	0,3871	
	1000	161	329	111	279	105	112,7	0,4361	BELIMO BE (40 N.m)
600 x	180	-	-	-	-	42,3	45,5	0,0371	BELIMO BEN (15 N.m)
	200	-	-	-	-	44,1	47,4	0,0477	
	225	-	-	-	-	46,3	49,8	0,0610	
	250	-	-	-	-	48,5	52,2	0,0742	
	280	-	-	-	-	51,2	55,1	0,0901	
	300	-	-	-	-	53	57	0,1007	
	315	-	-	-	-	54,3	58,4	0,1087	
	355	-	6,5	-	-	57,8	62,1	0,1299	
	400	-	29	-	-	61,7	66,3	0,1537	
	450	-	54	-	4	65,9	70,9	0,1802	
	500	-	79	-	29	70,2	75,5	0,2067	
	550	-	104	-	54	74,4	80	0,2332	
	560	-	109	-	59	75,2	80,8	0,2385	
	600	-	129	-	79	78,5	84,4	0,2597	
	630	-	144	-	94	81	87	0,2756	
	650	-	154	-	104	82,6	88,8	0,2862	
	700	11	179	-	129	86,7	93,1	0,3127	
	710	16	184	-	134	87,5	94	0,3180	
	750	36	204	-	154	90,7	97,4	0,3392	BELIMO BEE (25 N.m)
	800	61	229	11	179	94,6	101,6	0,3657	
	900	111	279	61	229	102,4	109,9	0,4187	

A x B [mm]		Damper blade overlaps without flanges		Damper blade overlaps with flanges		Weight [kg]		Free area S_f [m²]	Actuating mechanism type
		a [mm]	c [mm]	e [mm]	f [mm]	Without flanges	With flanges		
600 x	1000	161	329	111	279	110	118	0,4717	BELIMO BE (40 N.m)
630 x	180	-	-	-	-	43,1	46,3	0,0392	BELIMO BEN (15 N.m)
	200	-	-	-	-	45	48,4	0,0504	
	225	-	-	-	-	47,3	50,9	0,0644	
	250	-	-	-	-	49,7	53,4	0,0784	
	280	-	-	-	-	52,4	56,4	0,0952	
	300	-	-	-	-	54,3	58,4	0,1064	
	315	-	-	-	-	55,7	59,9	0,1148	
	355	-	6,5	-	-	59,3	63,8	0,1372	
	400	-	29	-	-	63,4	68,2	0,1624	
	450	-	54	-	4	67,8	73	0,1904	
	500	-	79	-	29	72,3	77,7	0,2184	
	550	-	104	-	54	76,6	82,4	0,2464	
	560	-	109	-	59	77,5	83,3	0,2520	
	600	-	129	-	79	81	87	0,2744	
	630	-	144	-	94	83,5	89,8	0,2912	
	650	-	154	-	104	85,2	91,6	0,3024	
	700	11	179	-	129	89,5	96,1	0,3304	
	710	16	184	-	134	90,3	97	0,3360	
	750	36	204	-	154	93,6	100,6	0,3584	BELIMO BEE (25 N.m)
	800	61	229	11	179	97,8	105	0,3864	
	900	111	279	61	229	105,9	113,6	0,4424	
	1000	161	329	111	279	113,8	122	0,4984	BELIMO BE (40 N.m)
650 x	180	-	-	-	-	43,6	46,9	0,0406	BELIMO BEN (15 N.m)
	200	-	-	-	-	45,6	49	0,0522	
	225	-	-	-	-	48	51,6	0,0667	
	250	-	-	-	-	50,4	54,2	0,0812	
	280	-	-	-	-	53,3	57,3	0,0986	
	300	-	-	-	-	55,1	59,3	0,1102	
	315	-	-	-	-	56,6	60,8	0,1189	
	355	-	6,5	-	-	60,3	64,9	0,1421	
	400	-	29	-	-	64,5	69,4	0,1682	
	450	-	54	-	4	69,1	74,3	0,1972	
	500	-	79	-	29	73,7	79,2	0,2262	
	550	-	104	-	54	78,2	84	0,2552	
	560	-	109	-	59	79,1	85	0,2610	
	600	-	129	-	79	82,6	88,8	0,2842	
	630	-	144	-	94	85,2	91,6	0,3016	
	650	-	154	-	104	87	93,5	0,3132	
	700	11	179	-	129	91,3	98,1	0,3422	
	710	16	184	-	134	92,2	99	0,3480	
	750	36	204	-	154	95,6	102,7	0,3712	BELIMO BEE (25 N.m)
	800	61	229	11	179	99,8	107,2	0,4002	
	900	111	279	61	229	108,2	116	0,4582	BELIMO BE (40 N.m)
	1000	161	329	111	279	116,2	124,6	0,5162	
700 x	180	-	-	-	-	45	48,4	0,0441	BELIMO BEN (15 N.m)
	200	-	-	-	-	47,1	50,6	0,0567	
	225	-	-	-	-	49,7	53,4	0,0725	
	250	-	-	-	-	52,2	56,2	0,0882	
	280	-	-	-	-	55,3	59,5	0,1071	
	300	-	-	-	-	57,3	61,7	0,1197	

A x B [mm]		Damper blade overlaps without flanges		Damper blade overlaps with flanges		Weight [kg]		Free area S_f [m²]	Actuating mechanism type
		a [mm]	c [mm]	e [mm]	f [mm]	Without flanges	With flanges		
700 x	315	-	-	-	-	58,8	63,3	0,1292	BELIMO BEN (15 N.m)
	355	-	6,5	-	-	62,9	67,6	0,1544	
	400	-	29	-	-	67,3	72,4	0,1827	
	450	-	54	-	4	72,3	77,7	0,2142	
	500	-	79	-	29	77,1	82,9	0,2457	
	550	-	104	-	54	81,9	88,1	0,2772	
	560	-	109	-	59	82,9	89,1	0,2835	
	600	-	129	-	79	86,7	93,1	0,3087	
	630	-	144	-	94	89,5	96,1	0,3276	BELIMO BEE (25 N.m)
	650	-	154	-	104	91,3	98,1	0,3402	
	700	11	179	-	129	95,9	103	0,3717	
	710	16	184	-	134	96,9	104	0,3780	
	750	36	204	-	154	100,5	107,9	0,4032	
	800	61	229	11	179	105	112,7	0,4347	
	900	111	279	61	229	113,8	122	0,4977	BELIMO BE (40 N.m)
	1000	161	329	111	279	122,3	131,1	0,5607	
710 x	180	-	-	-	-	45,2	48,7	0,0448	BELIMO BEN (15 N.m)
	200	-	-	-	-	47,4	50,9	0,0576	
	225	-	-	-	-	50	53,8	0,0736	
	250	-	-	-	-	52,6	56,6	0,0896	
	280	-	-	-	-	55,7	59,9	0,1088	
	300	-	-	-	-	57,8	62,1	0,1216	
	315	-	-	-	-	59,3	63,8	0,1312	
	355	-	6,5	-	-	63,4	68,2	0,1568	
	400	-	29	-	-	67,9	73	0,1856	
	450	-	54	-	4	72,9	78,4	0,2176	
	500	-	79	-	29	77,8	83,7	0,2496	
	550	-	104	-	54	82,7	88,9	0,2816	
	560	-	109	-	59	83,6	89,9	0,2880	
	600	-	129	-	79	87,5	94	0,3136	
	630	-	144	-	94	90,3	97	0,3328	BELIMO BEE (25 N.m)
	650	-	154	-	104	92,2	99	0,3456	
	700	11	179	-	129	96,9	104	0,3776	
	710	16	184	-	134	97,8	105	0,3840	
	750	36	204	-	154	101,5	108,9	0,4096	
	800	61	229	11	179	106	113,8	0,4416	
	900	111	279	61	229	114,9	123,2	0,5056	BELIMO BE (40 N.m)
	1000	161	329	111	279	123,5	132,3	0,5696	
750 x	180	-	-	-	-	46,3	49,8	0,0476	BELIMO BEN (15 N.m)
	200	-	-	-	-	48,5	52,2	0,0612	
	225	-	-	-	-	51,3	55,2	0,0782	
	250	-	-	-	-	54,1	58,1	0,0952	
	280	-	-	-	-	57,3	61,7	0,1156	
	300	-	-	-	-	59,5	64	0,1292	
	315	-	-	-	-	61,1	65,7	0,1394	
	355	-	6,5	-	-	65,4	70,3	0,1666	
	400	-	29	-	-	70,2	75,5	0,1972	
	450	-	54	-	4	75,4	81,1	0,2312	
	500	-	79	-	29	80,6	86,6	0,2652	
	550	-	104	-	54	85,6	92	0,2992	
	560	-	109	-	59	86,7	93,1	0,3060	

A x B [mm]		Damper blade overlaps without flanges		Damper blade overlaps with flanges		Weight [kg]		Free area S_f [m²]	Actuating mechanism type
		a [mm]	c [mm]	e [mm]	f [mm]	Without flanges	With flanges		
750 x	600	-	129	-	79	90,7	97,4	0,3332	BELIMO BEN (15 N.m)
	630	-	144	-	94	93,6	100,6	0,3536	BELIMO BEE (25 N.m)
	650	-	154	-	104	95,6	102,7	0,3672	
	700	11	179	-	129	100,5	107,9	0,4012	
	710	16	184	-	134	101,5	108,9	0,4080	
	750	36	204	-	154	105,3	113	0,4352	
	800	61	229	11	179	110	118	0,4692	BELIMO BE (40 N.m)
	900	111	279	61	229	119,3	127,9	0,5372	
	1000	161	329	111	279	128,3	137,4	0,6052	
800 x	180	-	-	-	-	47,7	51,3	0,0511	BELIMO BEN (15 N.m)
	200	-	-	-	-	50	53,8	0,0657	
	225	-	-	-	-	53	57	0,0840	
	250	-	-	-	-	55,9	60,1	0,1022	
	280	-	-	-	-	59,4	63,8	0,1241	
	300	-	-	-	-	61,7	66,3	0,1387	
	315	-	-	-	-	63,4	68,2	0,1497	
	355	-	6,5	-	-	67,9	73	0,1789	
	400	-	29	-	-	73	78,5	0,2117	
	450	-	54	-	4	78,5	84,4	0,2482	
	500	-	79	-	29	84	90,2	0,2847	
	550	-	104	-	54	89,3	96	0,3212	
	560	-	109	-	59	90,4	97,1	0,3285	
	600	-	129	-	79	94,6	101,6	0,3577	BELIMO BEE (25 N.m)
	630	-	144	-	94	97,8	105	0,3796	
	650	-	154	-	104	99,8	107,2	0,3942	
	700	11	179	-	129	105	112,7	0,4307	
	710	16	184	-	134	106	113,8	0,4380	
	750	36	204	-	154	110	118	0,4672	BELIMO BE (40 N.m)
	800	61	229	11	179	115	123,3	0,5037	
	900	111	279	61	229	124,7	133,6	0,5767	
	1000	161	329	111	279	134,1	143,5	0,6497	
900 x	180	-	-	-	-	50,3	54,1	0,0581	BELIMO BEN (15 N.m)
	200	-	-	-	-	53	57	0,0747	
	225	-	-	-	-	56,2	60,5	0,0955	
	250	-	-	-	-	59,5	64	0,1162	
	280	-	-	-	-	63,4	68,2	0,1411	
	300	-	-	-	-	65,9	70,9	0,1577	
	315	-	-	-	-	67,8	73	0,1702	
	355	-	6,5	-	-	72,9	78,4	0,2034	
	400	-	29	-	-	78,5	84,4	0,2407	
	450	-	54	-	4	84,6	91	0,2822	
	500	-	79	-	29	90,7	97,4	0,3237	BELIMO BEE (25 N.m)
	550	-	104	-	54	96,6	103,7	0,3652	
	560	-	109	-	59	97,8	105	0,3735	
	600	-	129	-	79	102,4	109,9	0,4067	
	630	-	144	-	94	105,9	113,6	0,4316	
	650	-	154	-	104	108,2	116	0,4482	
	700	11	179	-	129	113,8	122	0,4897	BELIMO BE (40 N.m)
	710	16	184	-	134	114,9	123,2	0,4980	
	750	36	204	-	154	119,3	127,9	0,5312	
	800	61	229	11	179	124,7	133,6	0,5727	

A x B [mm]		Damper blade overlaps without flanges		Damper blade overlaps with flanges		Weight [kg]		Free area S_f [m²]	Actuating mechanism type
		a [mm]	c [mm]	e [mm]	f [mm]	Without flanges	With flanges		
900 x	900	111	279	61	229	135,3	144,7	0,6557	BELIMO BE (40 N.m)
	1000	161	329	111	279	145,4	155,4	0,7387	
1000 x	180	-	-	-	-	53	57	0,0651	BELIMO BEN (15 N.m)
	200	-	-	-	-	55,9	60,1	0,0837	
	225	-	-	-	-	59,5	64	0,1070	
	250	-	-	-	-	63,1	67,9	0,1302	
	280	-	-	-	-	67,3	72,4	0,1581	
	300	-	-	-	-	70,2	75,5	0,1767	
	315	-	-	-	-	72,3	77,7	0,1907	
	355	-	6,5	-	-	77,8	83,7	0,2279	
	400	-	29	-	-	84	90,2	0,2697	
	450	-	54	-	4	90,7	97,4	0,3162	BELIMO BEE (25 N.m)
	500	-	79	-	29	97,2	104,4	0,3627	
	550	-	104	-	54	103,7	111,3	0,4092	
	560	-	109	-	59	105	112,7	0,4185	
	600	-	129	-	79	110	118	0,4557	
	630	-	144	-	94	113,8	122	0,4836	
	650	-	154	-	104	116,2	124,6	0,5022	
	700	11	179	-	129	122,3	131,1	0,5487	BELIMO BE (40 N.m)
	710	16	184	-	134	123,5	132,3	0,5580	
	750	36	204	-	154	128,3	137,4	0,5952	
	800	61	229	11	179	134,1	143,5	0,6417	
	900	111	279	61	229	145,4	155,4	0,7347	
	1000	161	329	111	279	156,2	166,7	0,8277	
1100 x	180	-	-	-	-	55,6	59,8	0,0721	BELIMO BEN (15 N.m)
	200	-	-	-	-	58,8	63,2	0,0927	
	225	-	-	-	-	62,7	67,5	0,1185	
	250	-	-	-	-	66,6	71,7	0,1442	
	280	-	-	-	-	71,3	76,7	0,1751	
	300	-	-	-	-	74,4	80	0,1957	
	315	-	-	-	-	76,6	82,4	0,2112	
	355	-	6,5	-	-	82,7	88,9	0,2524	
	400	-	29	-	-	89,3	96	0,2987	BELIMO BEE (25 N.m)
	450	-	54	-	4	96,6	103,7	0,3502	
	500	-	79	-	29	103,7	111,3	0,4017	
	550	-	104	-	54	110,7	118,7	0,4532	
	560	-	109	-	59	112	120,2	0,4635	
	600	-	129	-	79	117,5	125,9	0,5047	
	630	-	144	-	94	121,5	130,2	0,5356	BELIMO BE (40 N.m)
	650	-	154	-	104	124,1	133	0,5562	
	700	11	179	-	129	130,6	139,9	0,6077	
	710	16	184	-	134	131,9	141,2	0,6180	
	750	36	204	-	154	137	146,6	0,6592	
	800	61	229	11	179	143,2	153,1	0,7107	
	900	111	279	61	229	155,1	165,6	0,8137	
	1000	161	329	111	279	166,5	177,4	0,9167	
1250 x	180	-	-	-	-	59,5	64	0,0826	BELIMO BEN (15 N.m)
	200	-	-	-	-	63,1	67,9	0,1062	
	225	-	-	-	-	67,5	72,6	0,1357	
	250	-	-	-	-	71,9	77,3	0,1652	
	280	-	-	-	-	77,1	82,9	0,2006	

A x B [mm]		Damper blade overlaps without flanges		Damper blade overlaps with flanges		Weight [kg]		Free area S_f [m²]	Actuating mechanism type
		a [mm]	c [mm]	e [mm]	f [mm]	Without flanges	With flanges		
1250 x	300	-	-	-	-	80,6	86,6	0,2242	BELIMO BEN (15 N.m)
	315	-	-	-	-	83,1	89,3	0,2419	
	355	-	6,5	-	-	89,8	96,5	0,2891	BELIMO BEE (25 N.m)
	400	-	29	-	-	97,2	104,4	0,3422	
	450	-	54	-	4	105,3	113	0,4012	
	500	-	79	-	29	113,2	121,4	0,4602	
	550	-	104	-	54	120,8	129,5	0,5192	
	560	-	109	-	59	122,3	131,1	0,5310	
	600	-	129	-	79	128,3	137,4	0,5782	BELIMO BE (40 N.m)
	630	-	144	-	94	132,7	142	0,6136	
	650	-	154	-	104	135,6	145	0,6372	
	700	11	179	-	129	142,6	152,5	0,6962	
	710	16	184	-	134	144	154	0,7080	
	750	36	204	-	154	149,5	159,7	0,7552	
	800	61	229	11	179	156,2	166,7	0,8142	
	900	111	279	61	229	169	180	0,9322	
	1000	161	329	111	279	181	192,4	1,0502	SCHISCHEK InMax 50.75 (75 N.m)
1400 x	180	-	-	-	-	63,4	68,2	0,0931	BELIMO BEN (15 N.m)
	200	-	-	-	-	67,3	72,4	0,1197	
	225	-	-	-	-	72,3	77,7	0,1530	
	250	-	-	-	-	77,1	82,9	0,1862	
	280	-	-	-	-	82,9	89,1	0,2261	
	300	-	-	-	-	86,7	93,1	0,2527	
	315	-	-	-	-	89,5	96,1	0,2727	
	355	-	6,5	-	-	96,9	104	0,3259	BELIMO BEE (25 N.m)
	400	-	29	-	-	105	112,7	0,3857	
	450	-	54	-	4	113,8	122	0,4522	
	500	-	79	-	29	122,3	131,1	0,5187	
	550	-	104	-	54	130,6	139,9	0,5852	
	560	-	109	-	59	132,3	141,6	0,5985	BELIMO BE (40 N.m)
	600	-	129	-	79	138,7	148,3	0,6517	
	630	-	144	-	94	143,4	153,3	0,6916	
	650	-	154	-	104	146,5	156,6	0,7182	
	700	11	179	-	129	154,1	164,5	0,7847	
	710	16	184	-	134	155,6	166	0,7980	
	750	36	204	-	154	161,4	172,1	0,8512	
	800	61	229	11	179	168,5	179,5	0,9177	
	900	111	279	61	229	181,9	193,3	1,0507	SCHISCHEK InMax 50.75 (75 N.m)
	1000	161	329	111	279	194,4	206,1	1,1837	
1500 x	180	-	-	-	-	65,9	70,9	0,1001	BELIMO BEN (15 N.m)
	200	-	-	-	-	70,2	75,5	0,1287	
	225	-	-	-	-	75,4	81,1	0,1645	
	250	-	-	-	-	80,6	86,6	0,2002	
	280	-	-	-	-	86,7	93,1	0,2431	
	300	-	-	-	-	90,7	97,4	0,2717	
	315	-	-	-	-	93,6	100,6	0,2932	BELIMO BEE (25 N.m)
	355	-	6,5	-	-	101,5	108,9	0,3504	
	400	-	29	-	-	110	118	0,4147	
	450	-	54	-	4	119,3	127,9	0,4862	
	500	-	79	-	29	128,3	137,4	0,5577	
	550	-	104	-	54	137	146,6	0,6292	BELIMO BE (40 N.m)

A x B [mm]		Damper blade overlaps without flanges		Damper blade overlaps with flanges		Weight [kg]		Free area S_f [m²]	Actuating mechanism type
		a [mm]	c [mm]	e [mm]	f [mm]	Without flanges	With flanges		
1500 x	560	-	109	-	59	138,7	148,3	0,6435	BELIMO BE (40 N.m)
	600	-	129	-	79	145,4	155,4	0,7007	
	630	-	144	-	94	150,3	160,6	0,7436	
	650	-	154	-	104	153,5	163,9	0,7722	
	700	11	179	-	129	161,4	172,1	0,8437	
	710	16	184	-	134	162,9	173,7	0,8580	
	750	36	204	-	154	169	180	0,9152	
	800	61	229	11	179	176,3	187,5	0,9867	
	900	111	279	61	229	190	201,6	1,1297	SCHISCHEK InMax 50.75 (75 N.m)
	1000	161	329	111	279	202,6	214,5	1,2727	
1600 x	180	-	-	-	-	68,5	73,6	0,1071	BELIMO BEN (15 N.m)
	200	-	-	-	-	73	78,5	0,1377	
	225	-	-	-	-	78,5	84,4	0,1760	
	250	-	-	-	-	84	90,2	0,2142	
	280	-	-	-	-	90,4	97,1	0,2601	
	300	-	-	-	-	94,6	101,6	0,2907	BELIMO BEE (25 N.m)
	315	-	-	-	-	97,8	105	0,3137	
	355	-	6,5	-	-	106	113,8	0,3749	
	400	-	29	-	-	115	123,3	0,4437	
	450	-	54	-	4	124,7	133,6	0,5202	
	500	-	79	-	29	134,1	143,5	0,5967	BELIMO BE (40 N.m)
	550	-	104	-	54	143,2	153,1	0,6732	
	560	-	109	-	59	145	154,9	0,6885	
	600	-	129	-	79	151,9	162,2	0,7497	
	630	-	144	-	94	157	167,6	0,7956	
	650	-	154	-	104	160,4	171,1	0,8262	
	700	11	179	-	129	168,5	179,5	0,9027	
	710	16	184	-	134	170,1	181,1	0,9180	
	750	36	204	-	154	176,3	187,5	0,9792	
	800	61	229	11	179	183,7	195,2	1,0557	
	900	111	279	61	229	197,7	209,5	1,2087	SCHISCHEK InMax 50.75 (75 N.m)
	1000	161	329	111	279	210,4	222,3	1,3617	

IV. INSTALLATION

Placement and installation

- Dampers are designed to remove heat and combustion products (e.g. smoke) from fire compartments
- Dampers are suitable for installation in vertical and horizontal position passages of fire separating constructions. The damper installation procedures must be done so that all load transfer from the fire separating constructions to the damper is absolutely excluded.
- Following air-conditioning duct must be suspended or supported so that all load transfer from the following duct to the damper flange is absolutely excluded.
- The gap between the installed damper and the fire separating construction must be perfectly filled with approved material.
- After installing the damper, the damper blades must only be opened, or closed by operation of the actuator only.
- The distance between the damper and the construction (wall, ceiling) must be 75 mm at the minimum, according to EN 1366-2. If two or more dampers are to be installed in one fire separating construction, the distance between adjacent dampers must be 200 mm at the minimum, according to EN 1366-10.
- To provide the necessary space for access to the control device, it is recommended that other objects be at least 350 mm away from the control parts of the damper.

Minimum distance between the dampers and the construction

- minimum distance 200 mm between dampers, according to EN 1366-10
- minimum distance 75 mm between damper and construction (wall/ceiling), according to EN 1366-10

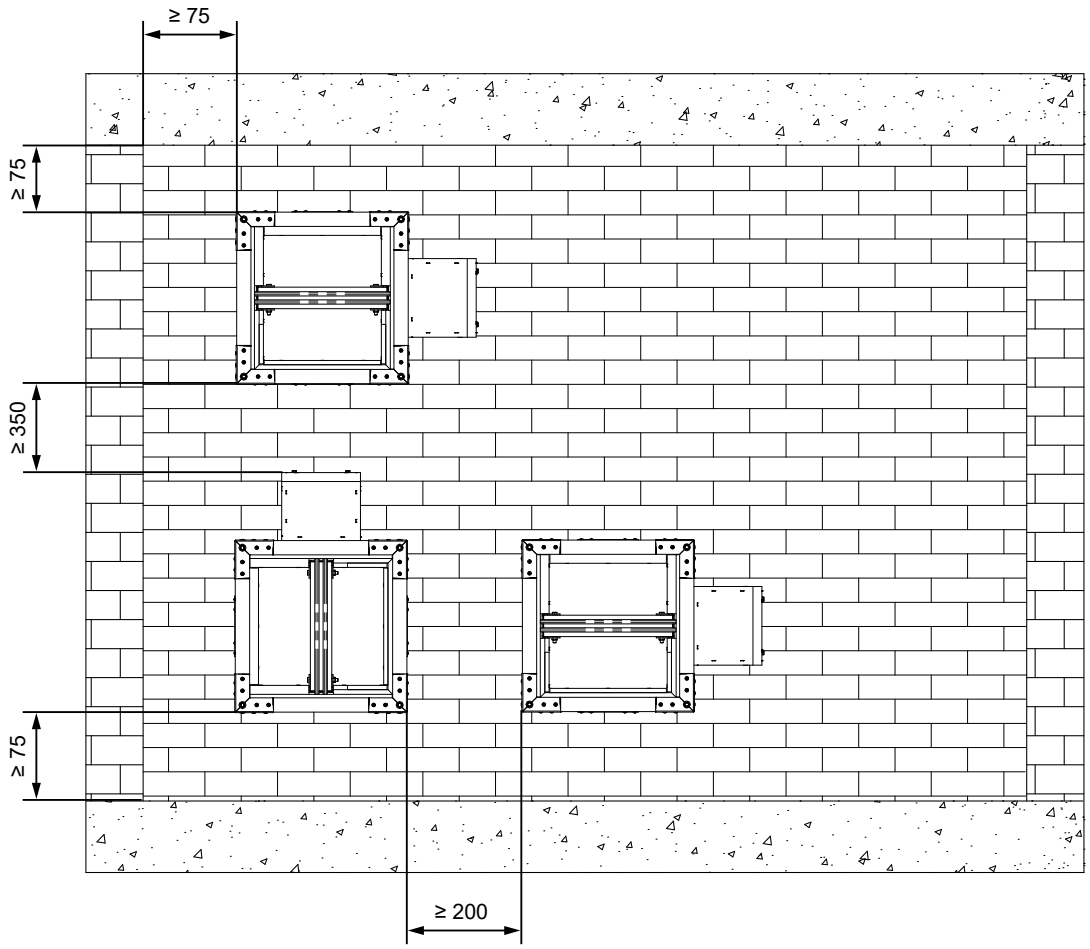

Dimensions of an installation opening

Mortar or gypsum

- X = min. 50 mm
- X = max. 150 mm

Mineral wool and boards

- X = min. 30 mm
- X = max. 75 mm

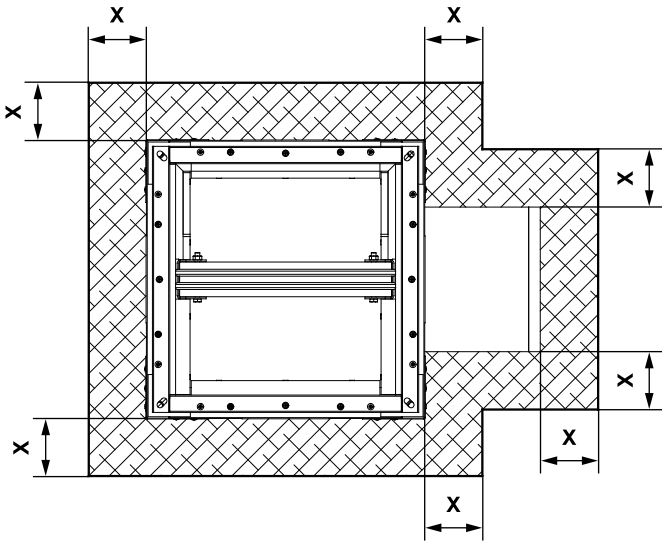

Ablative Coated Batt

- X = min. 30 mm
- X = max. 230 mm

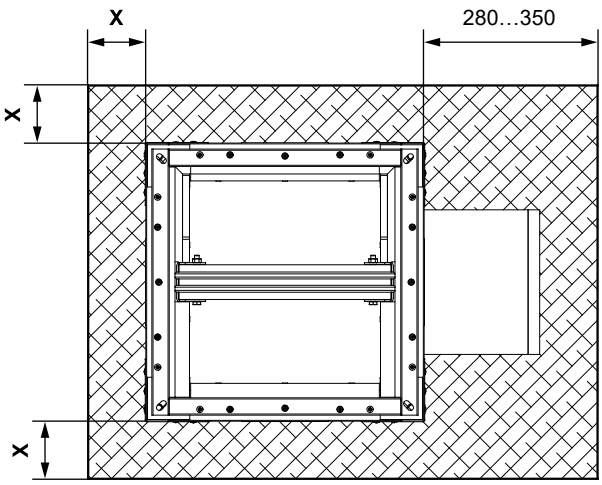

Statement of installations

Fire separating construction, location of the damper	Installation type, installation system	Gap width [mm]	Classification	Page
Horizontal or vertical smoke extraction ducts tested according to EN 1366-8 or EN 1366-9 ● into/onto the duct	Damper installed into/onto a duct with/without grille	N/A	EI120 (h_{od}) S1500[H]C_{mod}HOT400/30MAmulti EI120 (V_{ed}) S1500[V/H]C_{mod}HOT400/30MAmulti	37-40
Standard low- and high-density rigid wall construction according to EN 1363-1 ● damper in the wall ● 100 mm min. wall thickness	Mortar or gypsum *	50-150	EI 120 (v_{ew}) S1500[V/H]C_{mod}HOT 400/30MAmulti	25
	Ablative Coated Batt	30-230		29
	Mineral wool and boards	30-75		30
Standard flexible wall construction, min. EI90. according to EN 1363-1 ● damper in the wall ● 100 mm min. wall thickness	Mortar or gypsum	50-150	EI 120 (v_{ew}) S1500[V/H]C_{mod}HOT 400/30MAmulti	31
	Ablative Coated Batt	30-230		32
	Mineral wool and boards	30-75		33
Standard low- and high-density rigid floor construction according to EN 1366-2 ● damper in the floor ● 150 mm min. floor thickness	Mortar or gypsum	50-150	EI 120 (h_{ow}) S1500[H]C_{mod}HOT 400/30MAmulti	34
	Ablative Coated Batt	30-230		35
	Mineral wool and boards	30-75		36

* Including assembly of dampers – side by side → see pages 26 to 28

In solid wall construction

In solid wall construction - mortar or gypsum **EI 120 (v_{ew}) S1500[V/H]C_{mod}HOT 400/30MAmulti**

- Standard low- and high-density rigid wall construction according to EN 1363-1
- For connection of following duct → see page 47
- Examples of anchors to the fire dividing construction → see pages 41 to 46
- Damper must be properly supported until the gypsum has fully hardened.

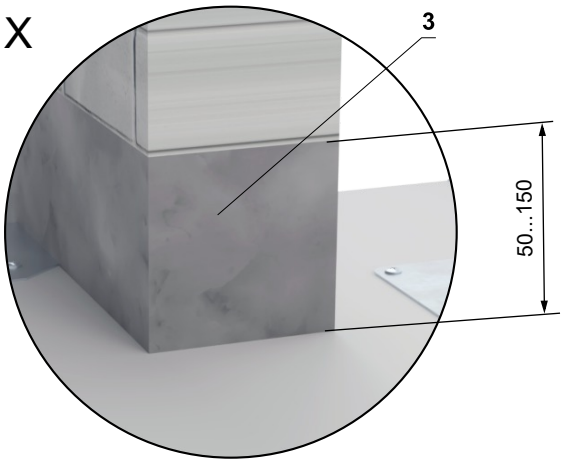

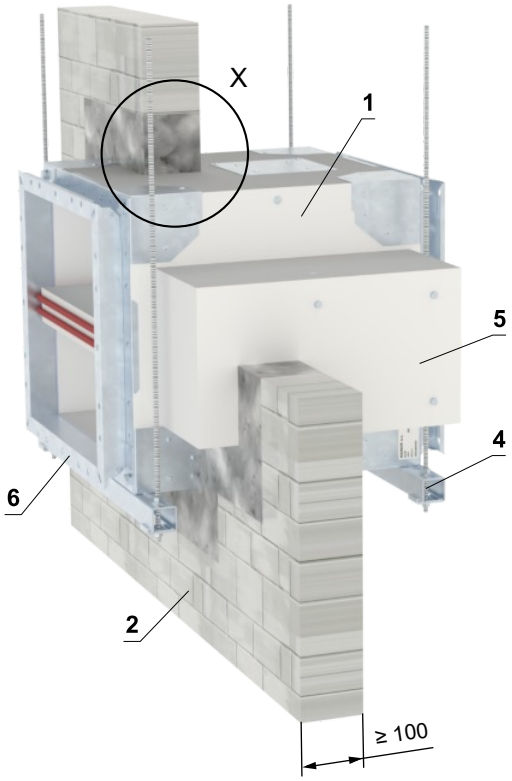

W = min. 50 mm
W = max. 150 mm

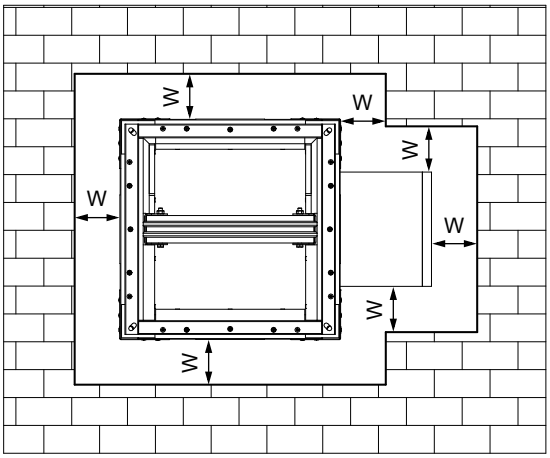

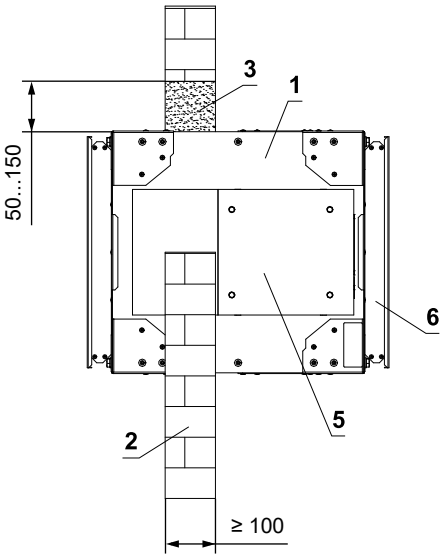

1 SEDM
2 Solid wall construction
3 Mortar or gypsum
4 Profile with threaded rod → see pages 41 to 42
5 Actuator cover - must be removable after installation of the damper
6 Flange

In solid wall construction - 2 dampers side by side - mortar or gypsum

EI 120 (v_{ew}) S1500[V/H]C_{mod}HOT 400/30MAmulti

- Standard low- and high-density rigid wall construction according to EN 1363-1
- For connection of following duct → see page 47
- Examples of anchors to the fire dividing construction → see pages 41 to 46
- Damper must be properly supported until the gypsum has fully hardened.
- Spacer straps and screw connections, are not included in the delivery!

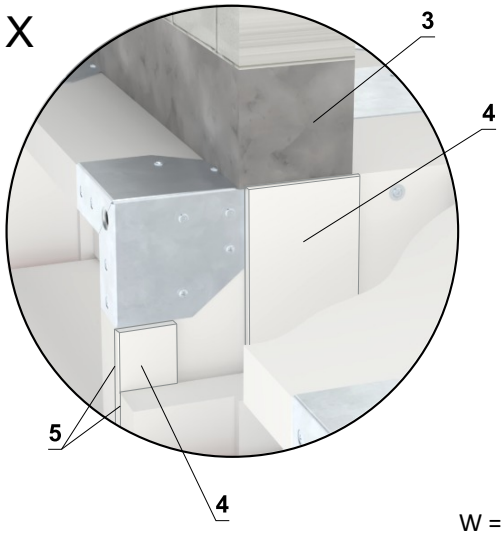

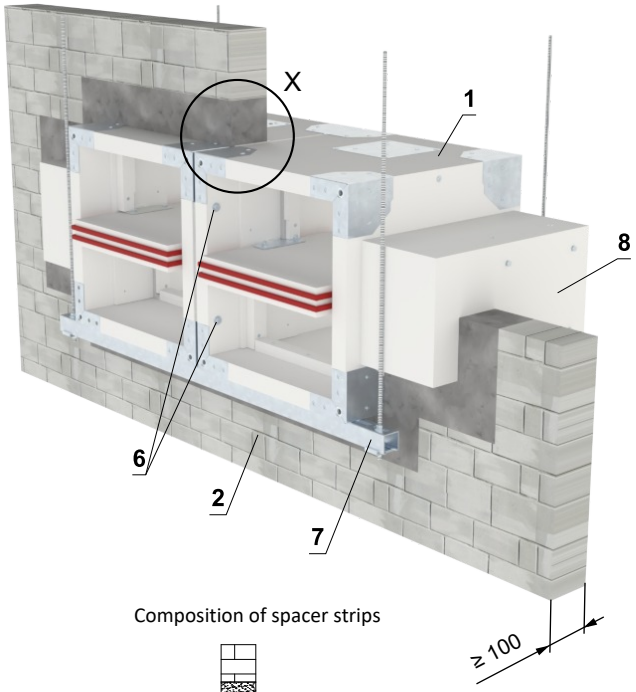

W = min. 50 mm
W = max. 150 mm

Composition of spacer strips

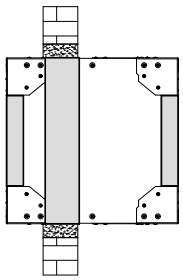

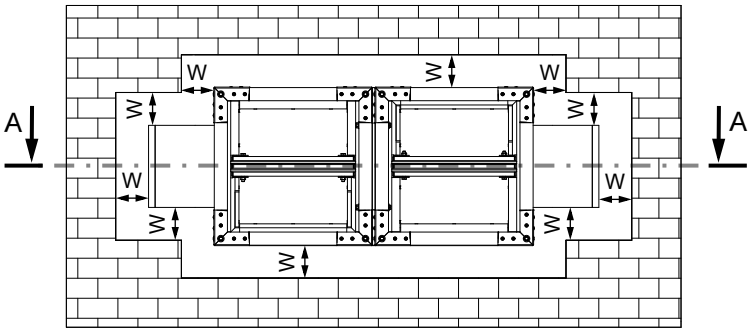

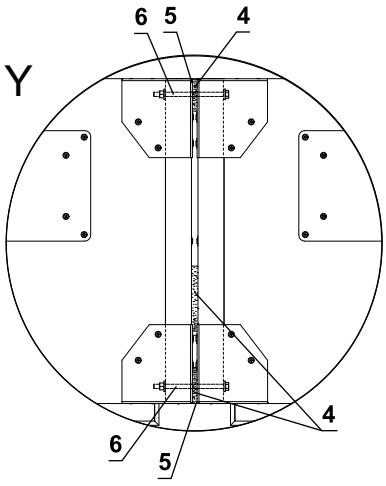

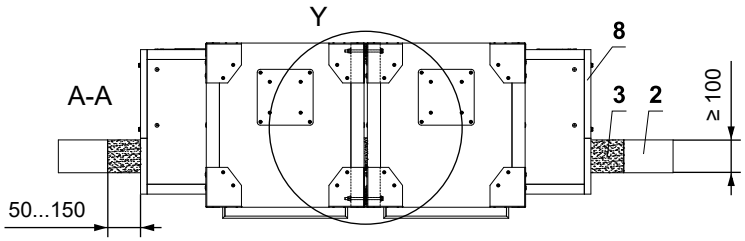

1 SEDM
2 Solid wall construction
3 Mortar or gypsum
4 Spacing strip (e.g. Promatect-H, th. 10 mm, strips at the edge is 50 mm wide, strip in the middle (in the place of the construction) is 100 mm wide) - glue with HILTI CFS-S ACR (position 5) to the damper body
5 Fire-resistant mastic - (HILTI CFS-S ACR...)
6 M8 bolt assembly (bolt M8x105 mm, 2 pcs washer, nut M8)*
7 Profile with threaded rod → see pages 41 to 42
8 Actuator cover - must be removable after installation of the damper

* **RESPECT JOINT POSITION !**
Bolts and nuts shall not prevent free rotation on the blades.

In solid wall construction - 2 on top of each other - mortar or gypsum

EI 120 (v_{ew}) S1500[V/H]C_{mod}HOT 400/30MAmulti

- Standard low- and high-density rigid wall construction according to EN 1363-1
- For connection of following duct → see page 47
- Examples of anchors to the fire dividing construction → see pages 41 to 46
- Damper must be properly supported until the gypsum has fully hardened.
- Spacer straps and screw connections, are not included in the delivery!

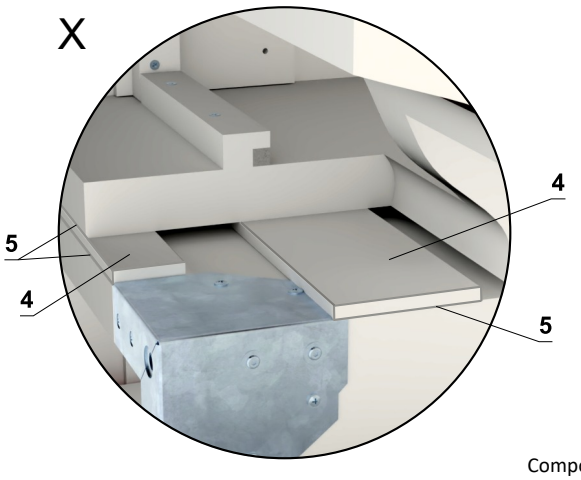

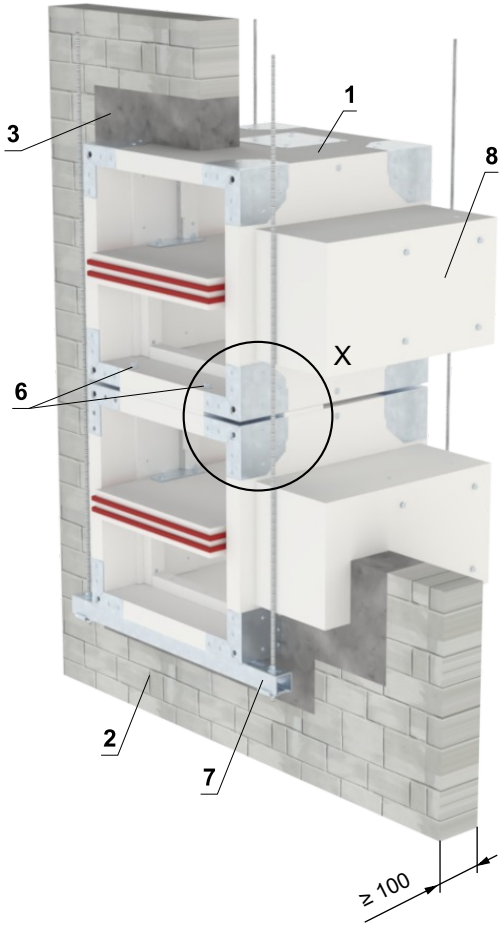

Composition of spacer strips

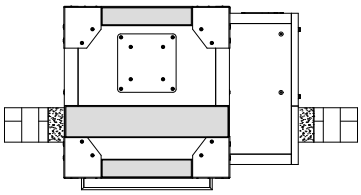

W = min. 50 mm
W = max. 150 mm

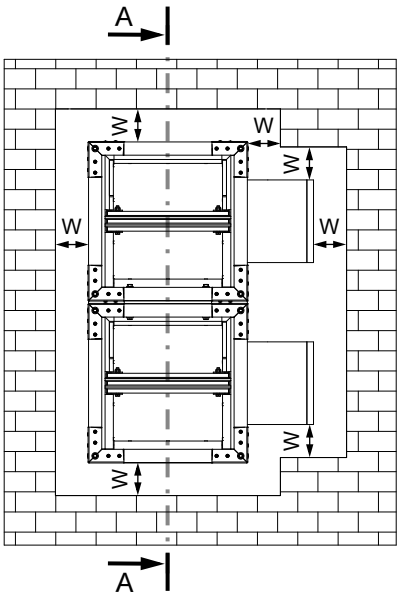

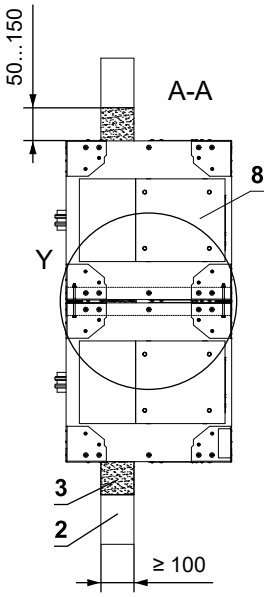

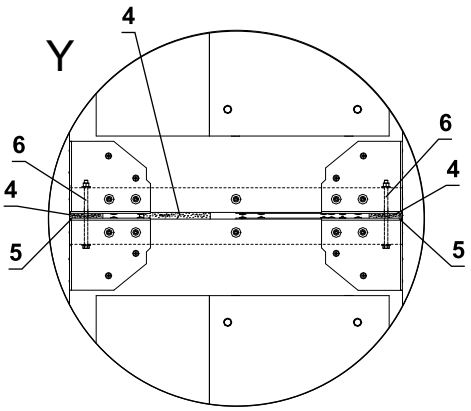

1 SEDM
2 Solid wall construction
3 Mortar or gypsum
4 Spacing strip (e.g. Promatect-H, th. 10 mm, strips at the edge is 50 mm wide, strip in the middle (in the place of the construction) is 100 mm wide) - glue with HILTI CFS-S ACR (position 5) to the damper body
5 Fire-resistant mastic - (HILTI CFS-S ACR...)
6 M8 bolt assembly (bolt M8x105 mm, 2 pcs washer, nut M8)
7 Profile with threaded rod → see pages 41 to 42
8 Actuator cover - must be removable after installation of the damper

In solid wall construction - 4 dampers - mortar or gypsum **EI 120 (v_{ew}) S1500[V/H]C_{mod}HOT 400/30MAmulti**

- Standard low- and high-density rigid wall construction according to EN 1363-1
- For connection of following duct → see page 47
- Examples of anchors to the fire dividing construction → see pages 41 to 46
- Damper must be properly supported until the gypsum has fully hardened.
- Spacer straps and screw connections, are not included in the delivery!

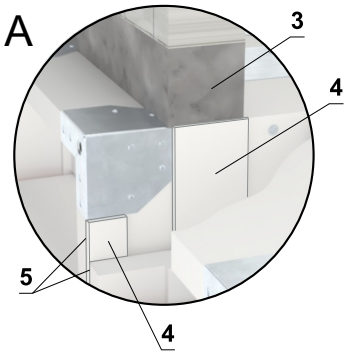

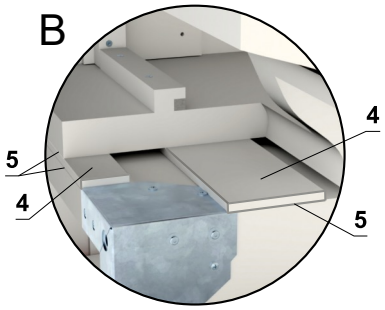

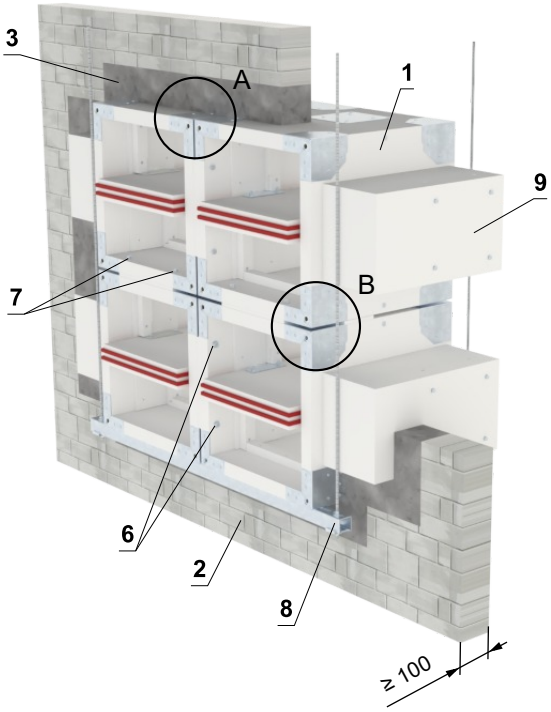

Composition of spacer strips (B)

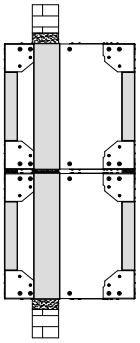

Composition of spacer strips (A)

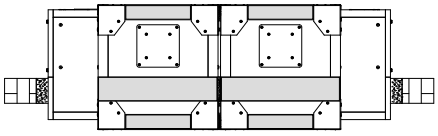

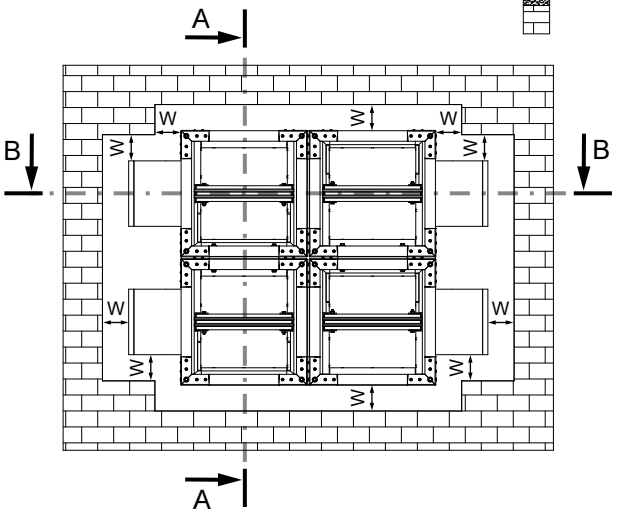

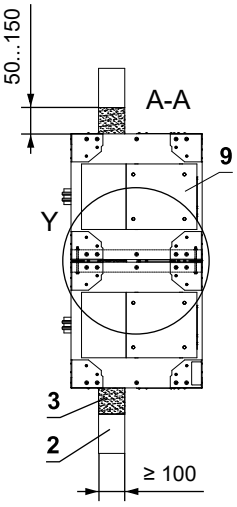

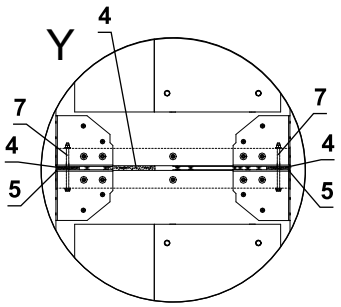

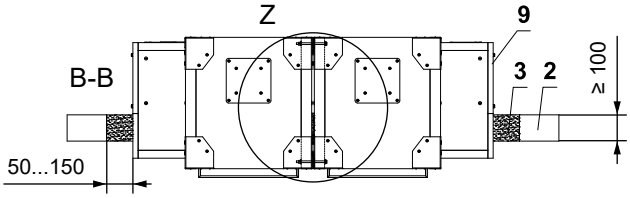

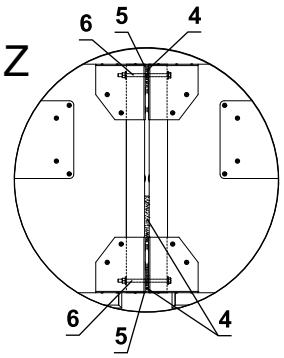

W = min. 50 mm
W = max. 150 mm

1 SEDM
2 Solid wall construction
3 Mortar or gypsum
4 Spacing strip (e.g. Promatect-H, th. 10 mm, strips at the edge is 50 mm wide, strip in the middle (in the place of the construction) is 100 mm wide) - glue with HILTI CFS-S ACR (position 5) to the damper body
5 Fire-resistant mastic - (HILTI CFS-S ACR...)
6 M8 bolt assembly (bolt M8x105 mm, 2 pcs washer, nut M8)*
7 M8 bolt assembly (bolt M8x105 mm, 2 pcs washer, nut M8), span max .400 mm
8 Profile with threaded rod → see pages 41 to 42
9 Actuator cover - must be removable after installation of the damper

* **RESPECT JOINT POSITION !**
Bolts and nuts shall not prevent free rotation on the blades.

In solid wall construction - Ablative Coated Batt **EI 120 (v_{ew}) S1500[V/H]C_{mod}HOT 400/30MAmulti**

- Standard low- and high-density rigid wall construction according to EN 1363-1
- For connection of following duct → see page 47
- Examples of anchors to the fire dividing construction → see pages 41 to 46

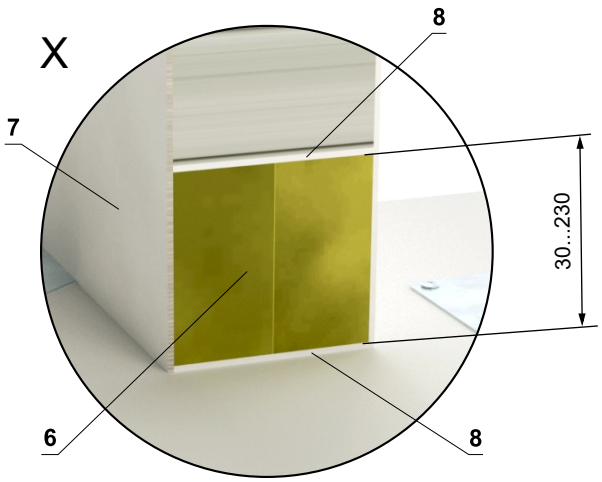

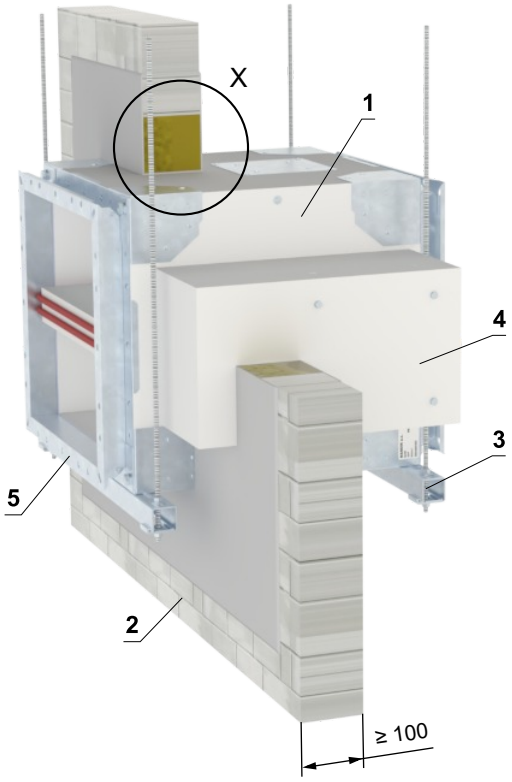

W = min. 30 mm
W = max. 230 mm

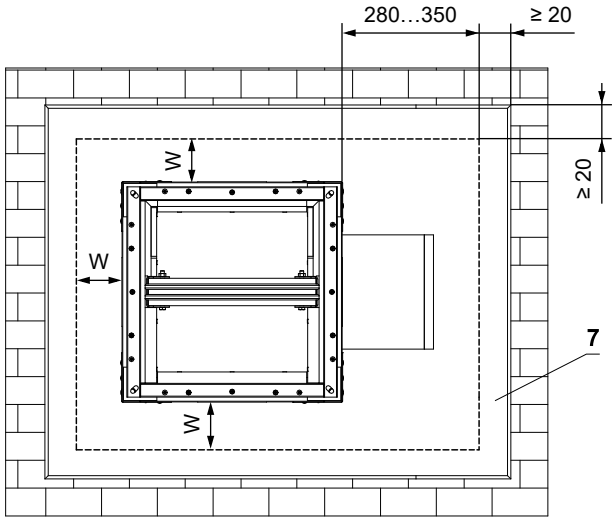

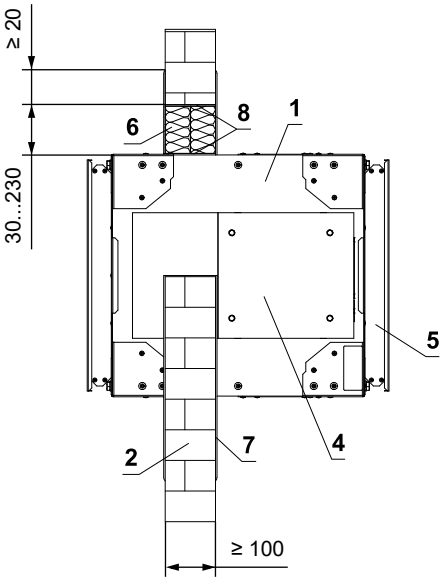

1 SEDM
2 Solid wall construction
3 Profile with threaded rod → see pages 41 to 42
4 Actuator cover - must be removable after installation of the damper
5 Flange
Ablative Coated Batt System HILTI*
6 Mineral wool board - min. density 140 kg/m³ (HILTI CFS-CT B 1S 140/50...)
7 Fire stop coating - th. 1 mm (HILTI CFS-CT...) - coating is overcoated on the support construction and on the damper casing/duct.
8 Fire-resistant mastic - (HILTI CFS-S ACR...) fill the gap from both sides of the fire separation construction and around the perimeter of penetration and damper casing.

* HILTI system can be replaced by a similar system with the same or higher thickness, density, fire reaction class, tested according to EN 1366-3.

In solid wall construction - mineral wool and boards **EI 120 (v_{ew}) S1500[V/H]C_{mod}HOT 400/30MAmulti**

- Standard low- and high-density rigid wall construction according to EN 1363-1
- For connection of following duct → see page 47
- Examples of anchors to the fire dividing construction → see pages 41 to 46

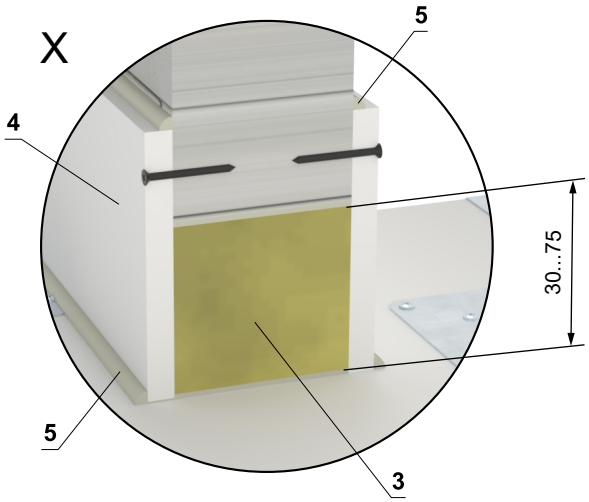

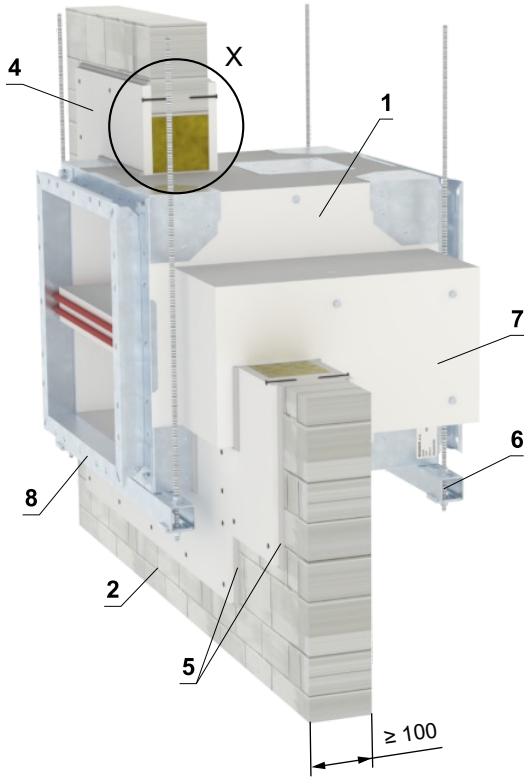

W = min. 30 mm
W = max. 75 mm

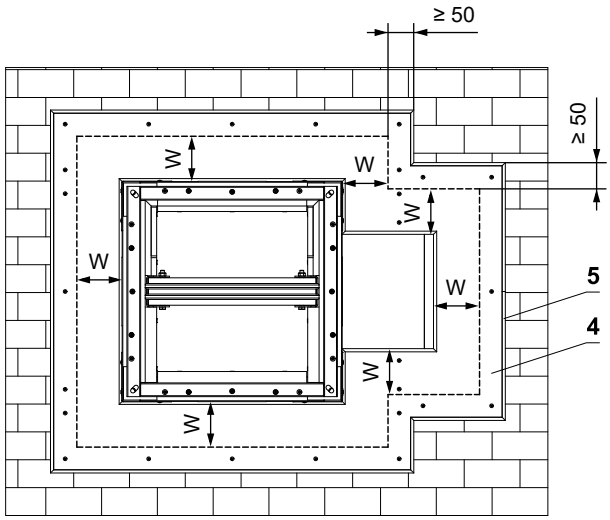

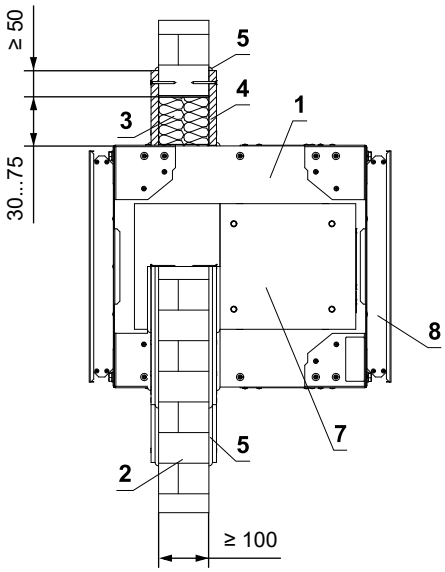

1 SEDM
2 Solid wall construction
3 Mineral wool board - min. density 140 kg/m³ (e.g. PROMAPYR-T150, ROCKWOOL HARDROCK / STEPROCK HD)
4 Fire-resistant board - min. th. 15 mm, min. density 870 kg/m³ (e.g. PROMATECT-H). Secure with screws min. 5x50 mm. The screws must be fixed in the construction (screw span ≤ 250 mm), if necessary use steel anchors.
5 Glue/Fire-resistant mastic (e.g. Promat K84 or equivalent) - glue Fire-resistant board to the construction and to the damper body and seal around the perimeter of the contact with the construction and damper
6 Profile with threaded rod → see pages 41 to 42
7 Actuator cover - must be removable after installation of the damper
8 Flange

In gypsum wall construction

In gypsum wall construction min. EI 90 - mortar or gypsum **EI 120 (v_{ew}) S1500[V/H]C_{mod}HOT 400/30MAmulti**

- Standard flexible wall construction, min. EI90. according to EN 1363-1.
- For connection of following duct → see page 47
- Examples of anchors to the fire dividing construction → see pages 41 to 46
- Damper must be properly supported until the gypsum has fully hardened.
- The installation opening is lined with a UW/CW profile.

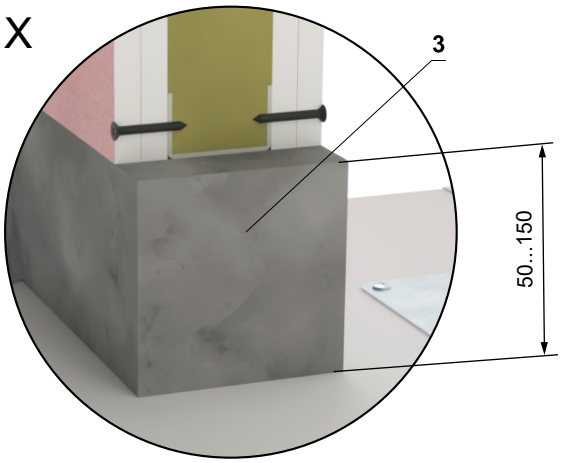

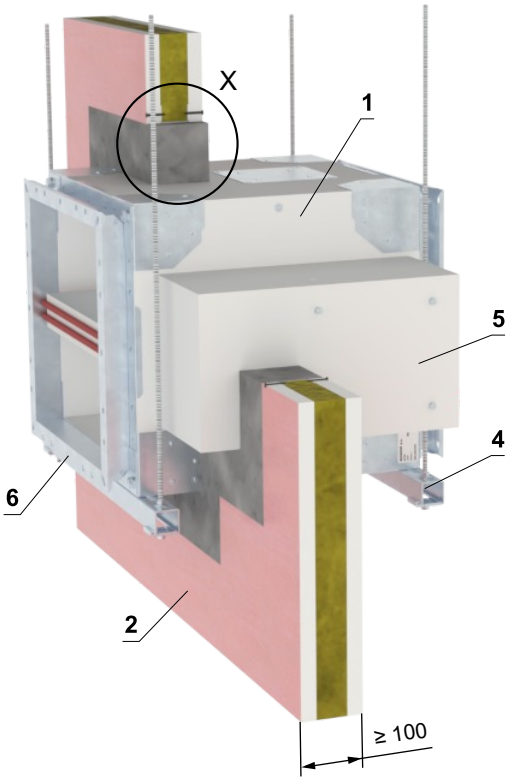

W = min. 50 mm
W = max. 150 mm

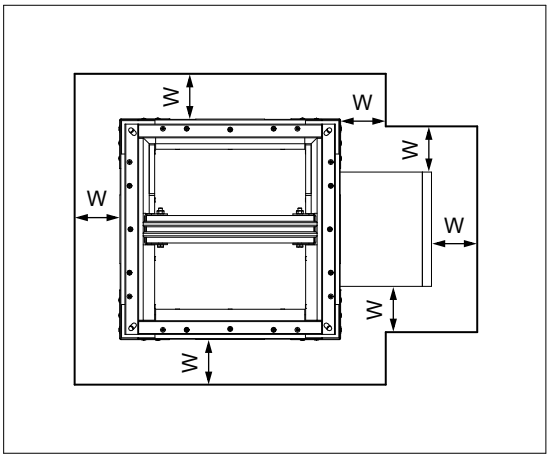

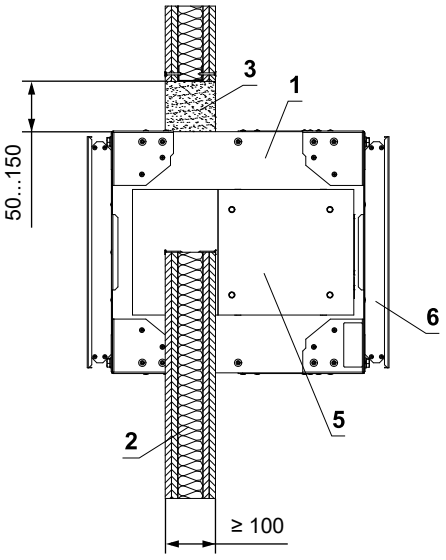

1 SEDM
2 Gypsum wall construction
3 Mortar or gypsum
4 Profile with threaded rod → see pages 41 to 42
5 Actuator cover - must be removable after installation of the damper
6 Flange

In gypsum wall construction min. EI 90 - Ablative Coated Batt

EI 120 (v_{ew}) S1500[V/H]C_{mod}HOT 400/30MAmulti

- Standard flexible wall construction, min. EI90. according to EN 1363-1.
- For connection of following duct → see page 47
- Examples of anchors to the fire dividing construction → see pages 41 to 46
- The installation opening is lined with a UW/CW profile.

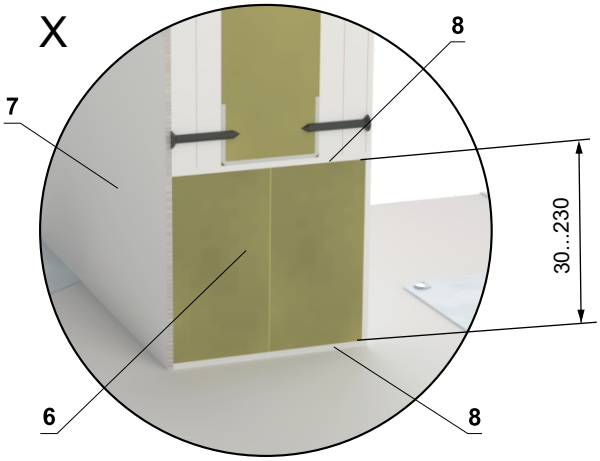

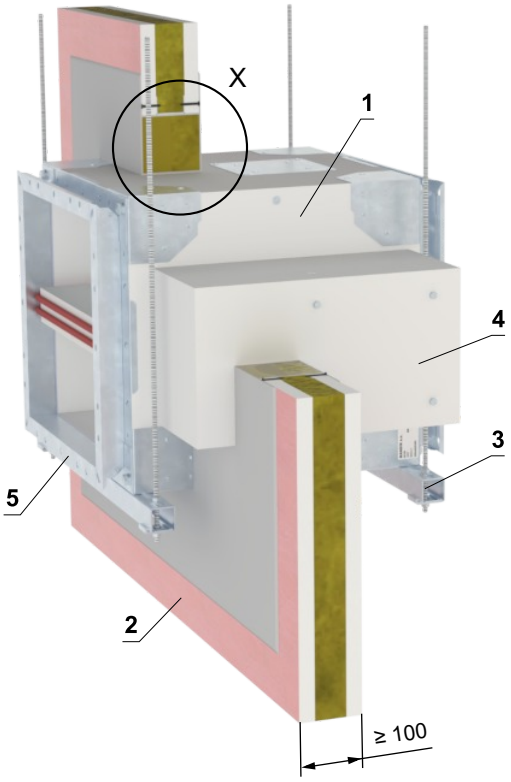

W = min. 30 mm
W = max. 230 mm

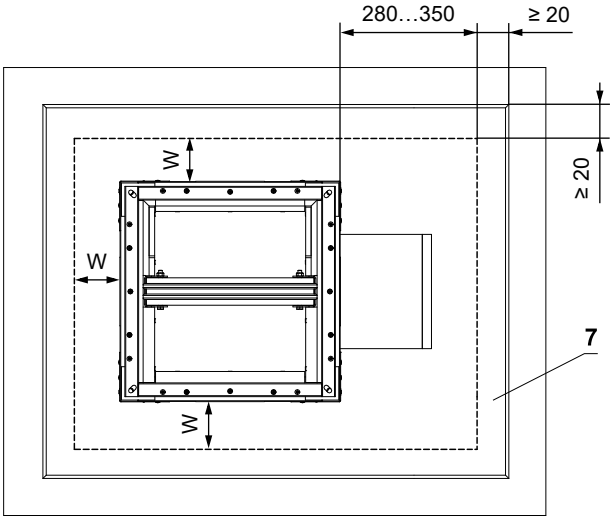

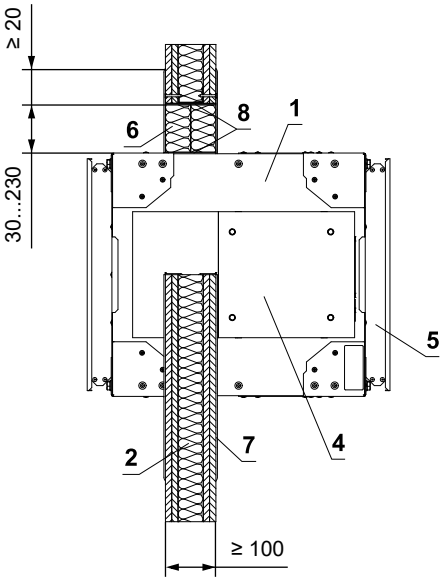

1 SEDM
2 Gypsum wall construction
3 Profile with threaded rod → see pages 41 to 42
4 Actuator cover - must be removable after installation of the damper
5 Flange
Ablative Coated Batt System HILTI*
6 Mineral wool board - min. density 140 kg/m³ (HILTI CFS-CT B 1S 140/50...)
7 Fire stop coating - th. 1 mm (HILTI CFS-CT...) - coating is overcoated on the support construction and on the damper casing/duct.
8 Fire-resistant mastic - (HILTI CFS-S ACR...) fill the gap from both sides of the fire separation construction and around the perimeter of penetration and damper casing.

* HILTI system can be replaced by a similar system with the same or higher thickness, density, fire reaction class, tested according to EN 1366-3.

In gypsum wall construction min. EI 90 - mineral wool and boards

EI 120 (v_{ew}) S1500[V/H]C_{mod}HOT 400/30MAmulti

- Standard flexible wall construction, min. EI90. according to EN 1363-1.
- For connection of following duct → see page 47
- Examples of anchors to the fire dividing construction → see pages 41 to 46
- The installation opening is lined with a UW/CW profile.

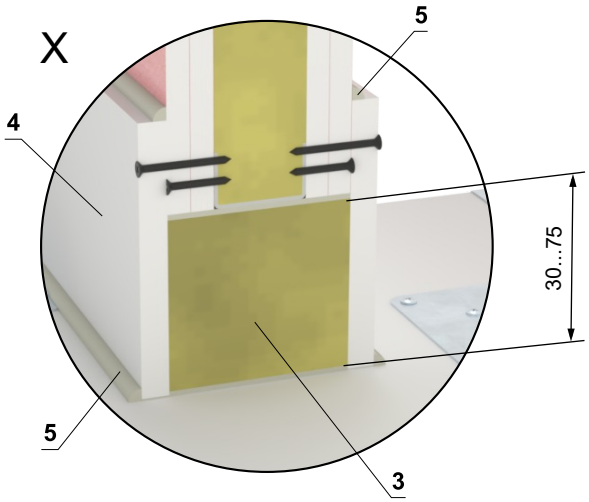

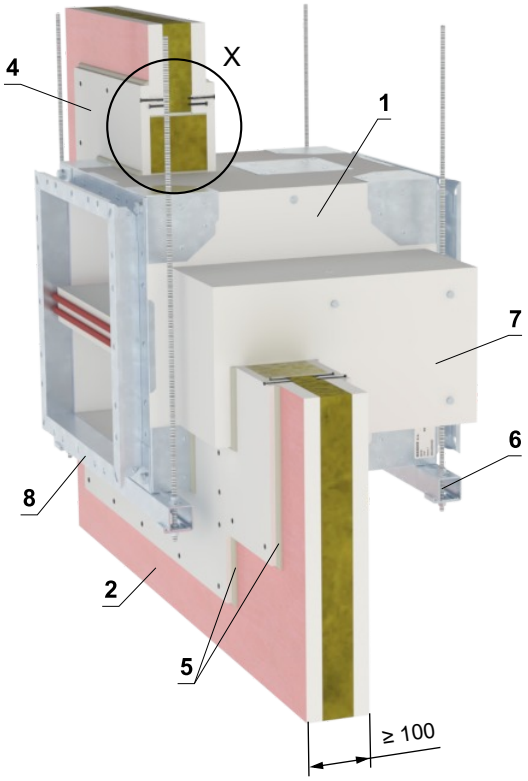

W = min. 30 mm
W = max. 75 mm

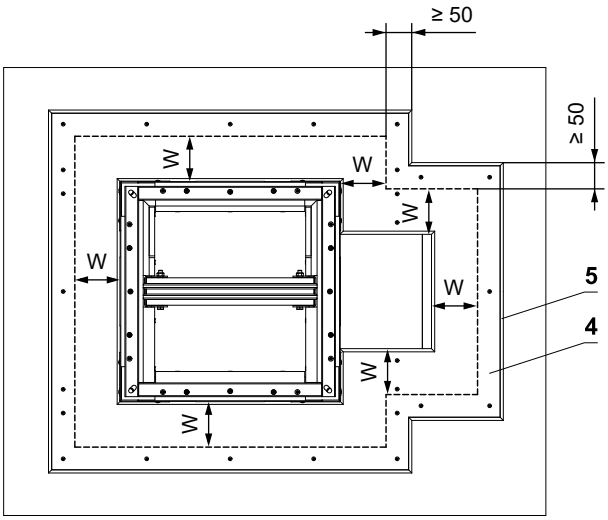

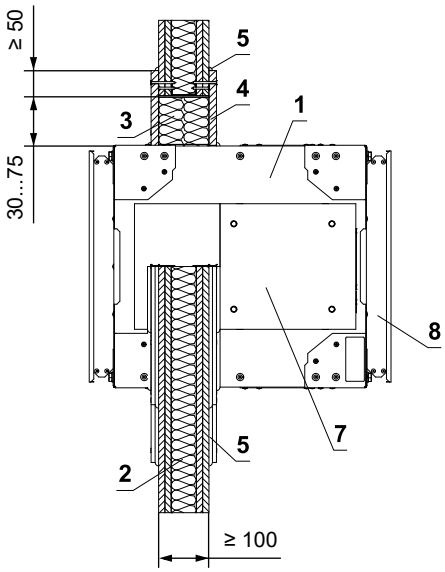

1 SEDM
2 Gypsum wall construction
3 Mineral wool board - min. density 140 kg/m³ (e.g. PROMAPYR-T150, ROCKWOOL HARDROCK / STEPROCK HD)
4 Fire-resistant board - min. th. 15 mm, min. density 870 kg/m³ (e.g. PROMATECT-H). Secure with screws min. 5x50 mm. The screws must be fixed in the construction (screw span ≤ 250 mm), if necessary use steel anchors.
5 Glue/Fire-resistant mastic (e.g. Promat K84 or equivalent) - glue Fire-resistant board to the construction and to the damper body and seal around the perimeter of the contact with the construction and damper
6 Profile with threaded rod → see pages 41 to 42
7 Actuator cover - must be removable after installation of the damper
8 Flange

In solid ceiling construction

In solid ceiling construction - mortar or gypsum

EI 120 (h_{ow}) S1500[H]C_{mod}HOT 400/30MAmulti

- Standard low- and high-density rigid floor construction according to EN 1366-2
- For connection of following duct → see page 47
- Examples of anchors to the fire dividing construction → see pages 41 to 46
- Number of L-holders and their placement, acc. to AxB dimension → see page 43
- Damper must be properly supported until the gypsum has fully hardened.
- The damper can be installed from both sides of the construction, i.e. From the top or the bottom side of the ceiling

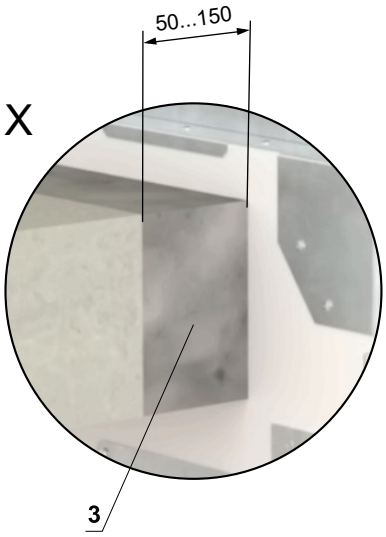

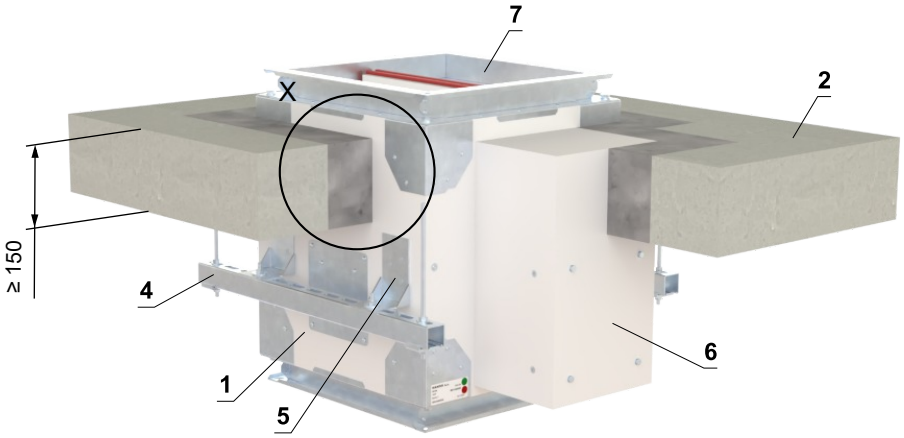

W = min. 50 mm
W = max. 150 mm

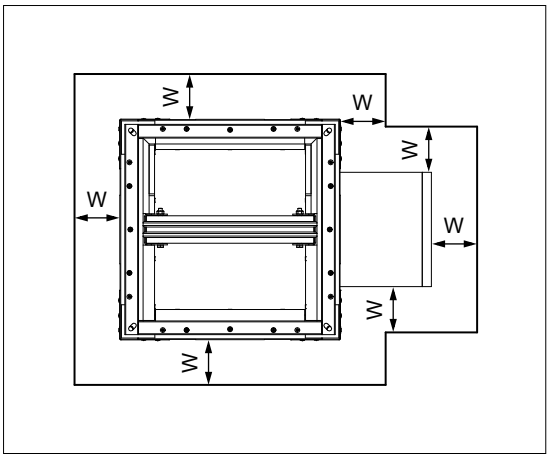

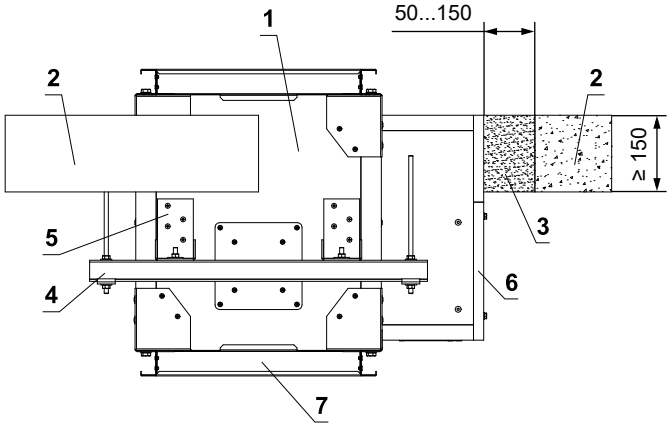

1 SEDM
2 Solid ceiling construction
3 Mortar or gypsum
4 Profile with threaded rod → see pages 41 to 42
5 L-holder → see page 43
6 Actuator cover - must be removable after installation of the damper
7 Flange

In solid ceiling construction - Ablative Coated Batt **EI 120 (h_{ow}) S1500[H]C_{mod}HOT 400/30MAmulti**

- Standard low- and high-density rigid floor construction according to EN 1366-2
- For connection of following duct → see page 47
- Examples of anchors to the fire dividing construction → see pages 41 to 46
- Number of L-holders and their placement, acc. to AxB dimension → see page 43
- The damper can be installed from both sides of the construction, i.e. From the top or the bottom side of the ceiling

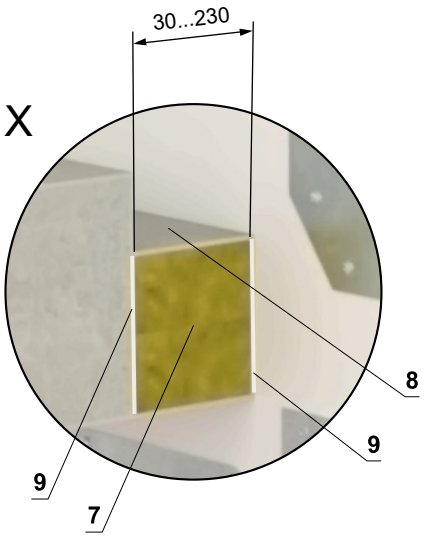

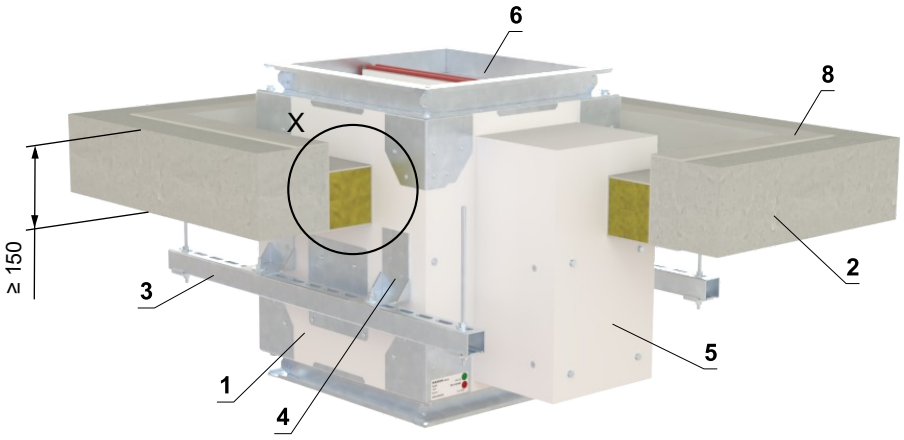

W = min. 30 mm
W = max. 230 mm

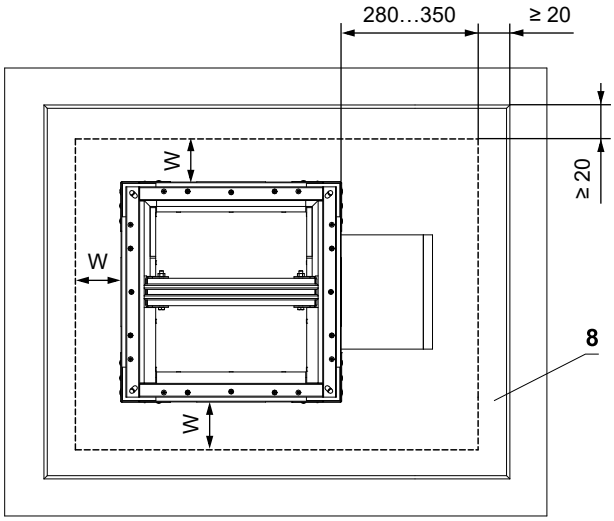

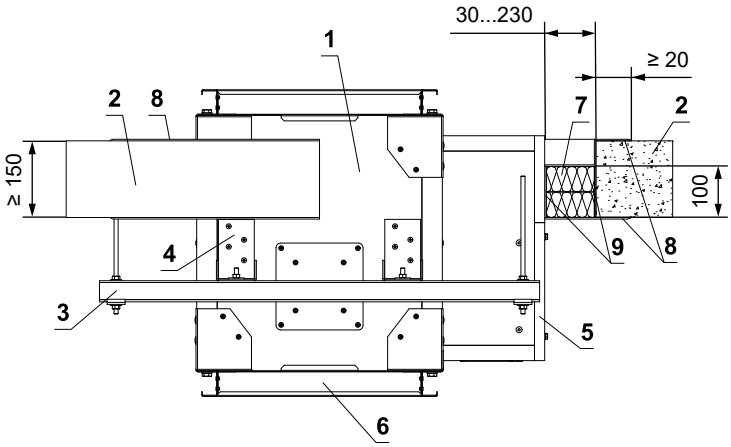

1 SEDM
2 Solid ceiling construction
3 Profile with threaded rod → see pages 41 to 42
4 L-holder → see page 43
5 Actuator cover - must be removable after installation of the damper
6 Flange
Ablative Coated Batt System HILTI*
7 Mineral wool board - min. density 140 kg/m³ (HILTI CFS-CT B 1S 140/50...)
8 Fire stop coating - th. 1 mm (HILTI CFS-CT...) - coating is overcoated on the support construction and on the damper casing/duct.
9 Fire-resistant mastic - (HILTI CFS-S ACR...) fill the gap from both sides of the fire separation construction and around the perimeter of penetration and damper casing.

* HILTI system can be replaced by a similar system with the same or higher thickness, density, fire reaction class, tested according to EN 1366-3.

In solid ceiling construction - mineral wool and boards **EI 120 (h_{ow}) S1500[H]C_{mod}HOT 400/30MAmulti**

- Standard low- and high-density rigid floor construction according to EN 1366-2
- For connection of following duct → see page 47
- Examples of anchors to the fire dividing construction → see pages 41 to 46
- Number of L-holders and their placement, acc. to AxB dimension → see page 43
- The damper can be installed from both sides of the construction, i.e. From the top or the bottom side of the ceiling

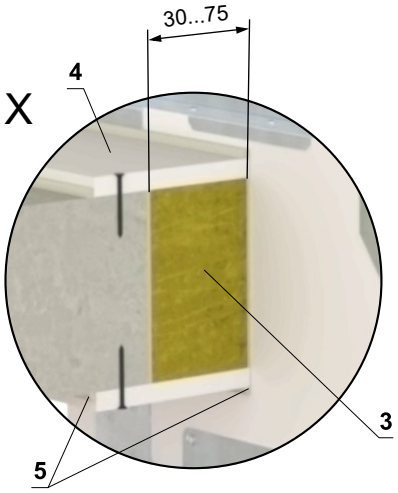

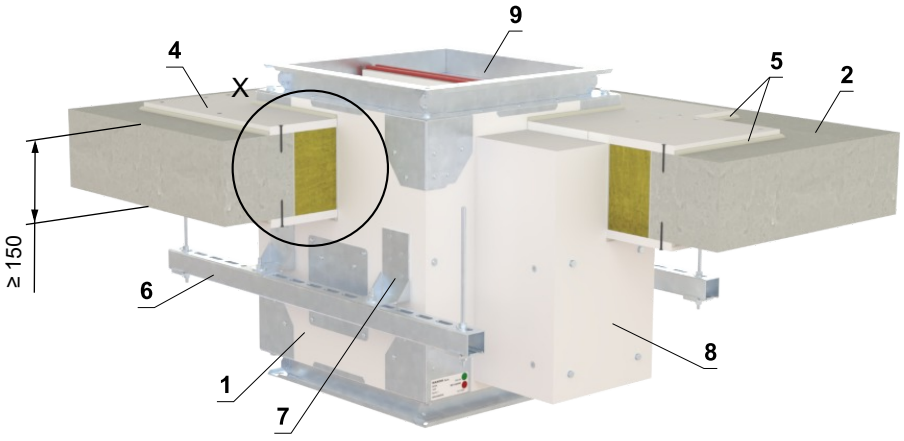

W = min. 30 mm
W = max. 75 mm

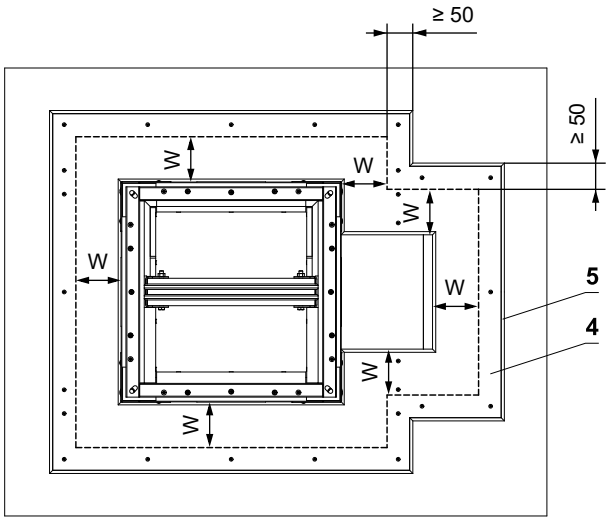

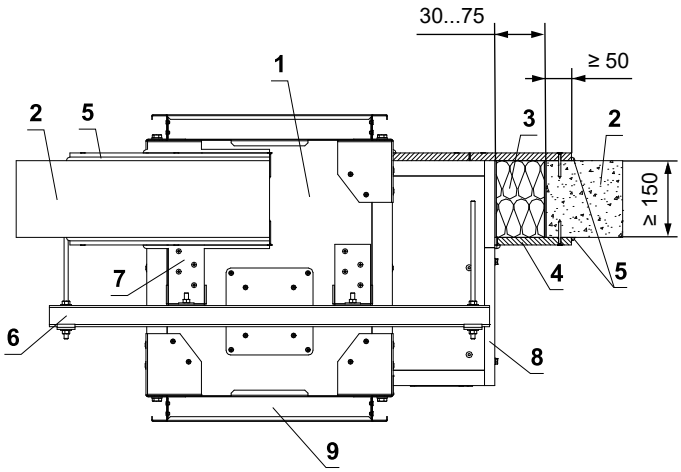

1 SEDM
2 Solid ceiling construction
3 Mineral wool board - min. density 140 kg/m³ (e.g. PROMAPYR-T150, ROCKWOOL HARDROCK / STEPROCK HD)
4 Fire-resistant board - min. th. 15 mm, min. density 870 kg/m³ (e.g. PROMATECT-H). Secure with screws min. 5x50 mm. The screws must be fixed in the construction (screw span ≤ 250 mm), if necessary use steel anchors.
5 Glue/Fire-resistant mastic (e.g. Promat K84 or equivalent) - glue Fire-resistant board to the construction and to the damper body and seal around the perimeter of the contact with the construction and damper
6 Profile with threaded rod → see pages 41 to 42
7 L-holder → see page 43
8 Actuator cover - must be removable after installation of the damper
9 Flange

Installation damper into/onto smoke extraction ducts

Installation of the damper into/onto horizontal or vertical steel smoke extraction duct insulated with mineral wool

EI120 (h_{od}) S1500[H]C_{mod}HOT400/30MAmulti
EI120 (v_{ed}) S1500[V/H]C_{mod}HOT400/30MAmulti

- The dampers may be installed onto or into smoke extraction ducts listed below:
  - **FlameshieldEN (manufacturer Kent Ductwork Ltd.)**
    The duct is made of 1.2 mm thick galvanized steel sheet and insulated with 1 layer of 90 mm thick stone wool Rockwool FirePro DuctRock Slab (manufacturer ROCKWOOL Ltd.). The stone wool is finished with a black aluminium foil on the outer side.
  - **FPL BW18 (manufacturer Fire Protection Ltd.)**
    The duct is made of galvanized steel sheet. The thickness of the duct depends of its dimensions. The surface of the duct is fire sprayed with Flamebar BW18 (manufacturer Firespray International Ltd). The duct is insulated with two layers of stone wool. The first layer is made of 50 mm thick ROCKWOOL FPL 110 SLAB and the second layer with aluminium foil is made of 50 mm thick ROCKWOOL FPL 110 FOIL FACED SLAB (manufacturer ROCKWOOL Ltd.)
  - **IFS-DS (manufacturer Imperial Ductwork Services Ltd.)**
    The duct is made of 1 mm thick galvanized steel sheet and insulated with two layers of 60 mm thick stone wool ULTIMATE U Protect Slab 4.0 Alu1 (manufacturer ISOVER). The stone wool is finished with a black aluminium foil on the outer side.
- The dampers may be installed onto or into other smoke extraction ducts than that specified above with the following limitations:
  - The duct shall be tested according to EN 1366-9 or EN 1366-8 depending on the intended use.
  - The duct shall be made of material of the same or greater density and of the same or greater thickness as the ducts listed above.
  - Changing surface protection materials is not permitted.
  - Changing the paint surface finish is not permitted.
- Support, drop rods, anchors etc. must be used in accordance with a duct manufacturer instructions.
- The connected duct shall be suspended in such a way that the transfer of all loads from the duct to the damper is completely excluded.
- The damper may be installed in position according picture below.

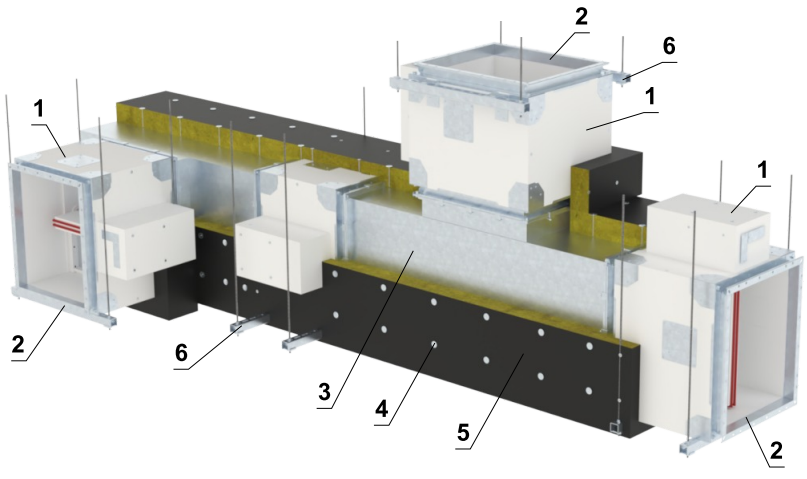

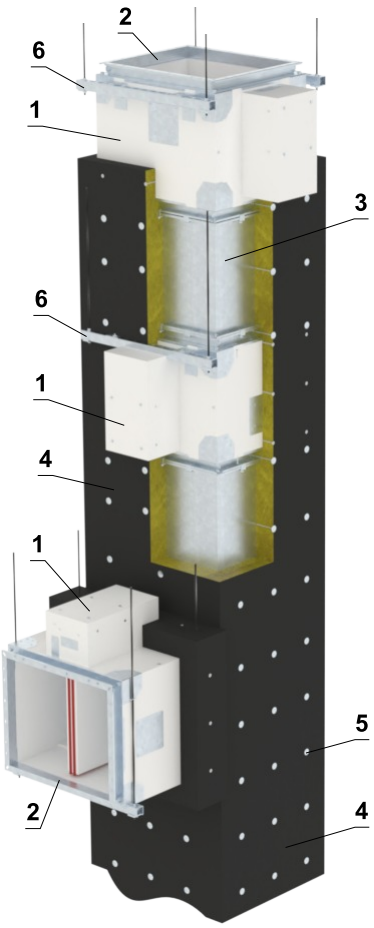

1 SEDM
2 SEDM flange
3 Steel smoke extraction duct (type according to duct manufacturer instructions)
4 Surface protection material (type according to duct manufacturer instructions)
5 Steel insulation pin (type according to duct manufacturer instructions)
6 Suspension system (type according to duct manufacturer instructions)

(continued on next page)

continuation of installation damper into/onto horizontal or vertical steel smoke extraction duct insulated with mineral wool

- The damper is connected to the smoke extraction duct by the damper flange as follow:
  - M10 bolts, washers and nuts are used at the corners of the flange
  - C-clamps with M8 bolts with a maximum spacing of 200 mm are used around the circumference
  - Ceramic selfadhesive sealing tape is inserted between flanges

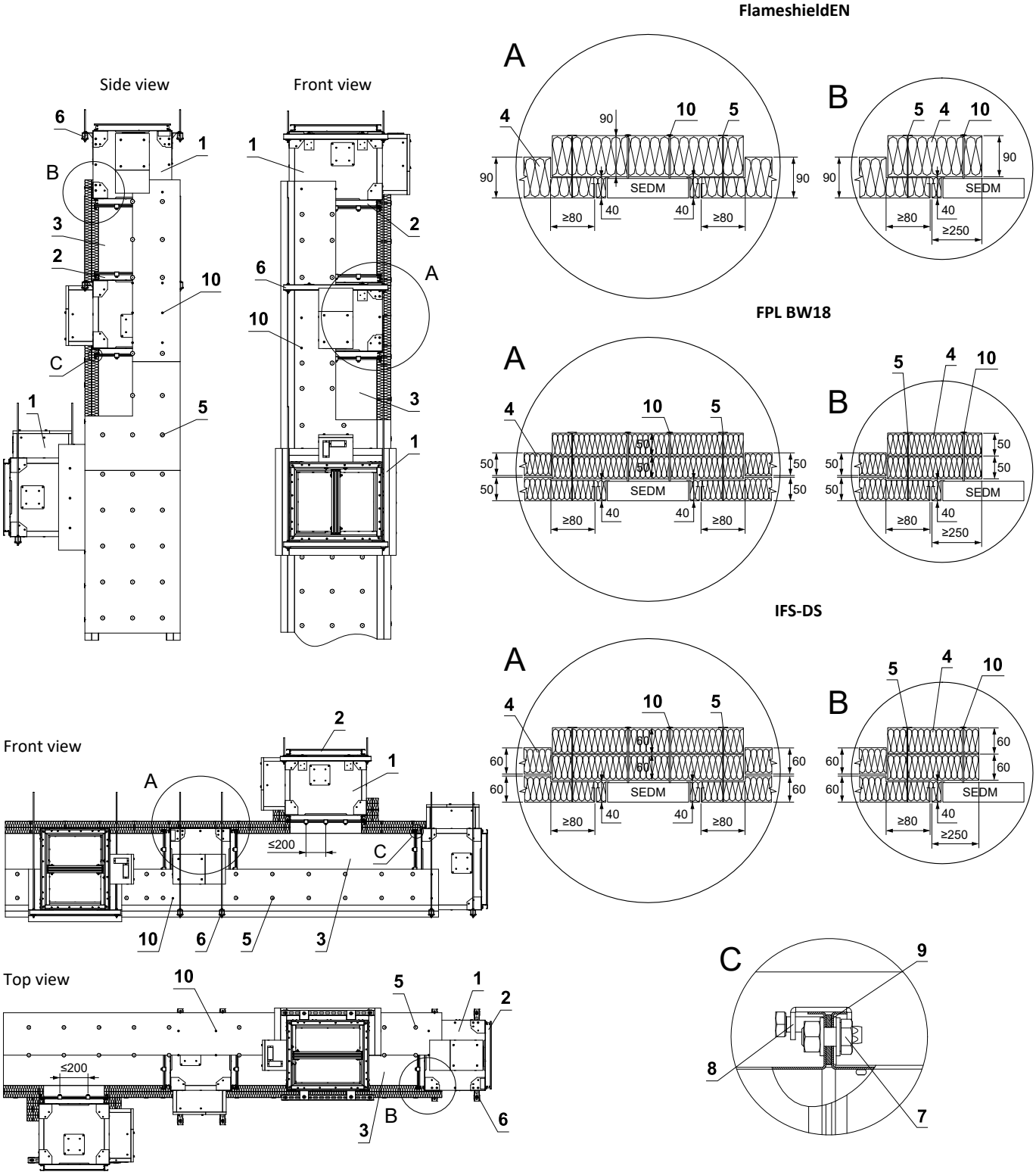

1 SEDM
2 SEDM flange
3 Steel smoke extraction duct (type according to duct manufacturer instructions)
4 Surface protection material (type according to duct manufacturer instructions)
5 Steel insulation pin (type according to duct manufacturer instructions)
6 Suspension system (type according to duct manufacturer instructions)
7 Flange connection at corners - M10 bolt, washers and nut
8 M8 C-clamps - maximum spacing of C-clamps 200 mm (type according to duct manufacturer instructions)
9 Ceramic selfadhesive sealing tape - arround the duct circumference (type according to duct manufacturer instructions)
10 Insulation connection to the damper body – washer M5 (DIN 9021), screw 5×L mm (screw length = insulation thickness + 20 mm), with a maximum spacing of 200 mm and a distance of 50–150 mm from the damper edges

Installation of the damper into/onto horizontal or vertical smoke extraction duct made of calcium silicate boards

EI120 (h_{od}) S1500[H]C_{mod}HOT400/30MAmulti
EI120 (v_{ed}) S1500[V/H]C_{mod}HOT400/30MAmulti

- The dampers may be installed onto or into smoke extraction ducts listed below:
  - **Smoke extraction duct Promatect-L500 (manufacturer Promat)**
    Smoke extraction self-supporting duct made of Promatect-L500 of thickness 40 mm and density 500 kg/m^3.
- The dampers may be installed onto or into other smoke extraction ducts than that specified above with the following limitations:
  - The duct shall be tested according to EN 1366-9 or EN 1366-8 depending on the intended use.
  - The duct shall be made of material of the same or greater density and of the same or greater thickness as the ducts listed above.
- Support, drop rods, anchors etc. must be used in accordance with a duct manufacturer instructions.
- The connected duct shall be suspended in such a way that the transfer of all loads from the duct to the damper is completely excluded.
- The damper may be installed in position according picture below.

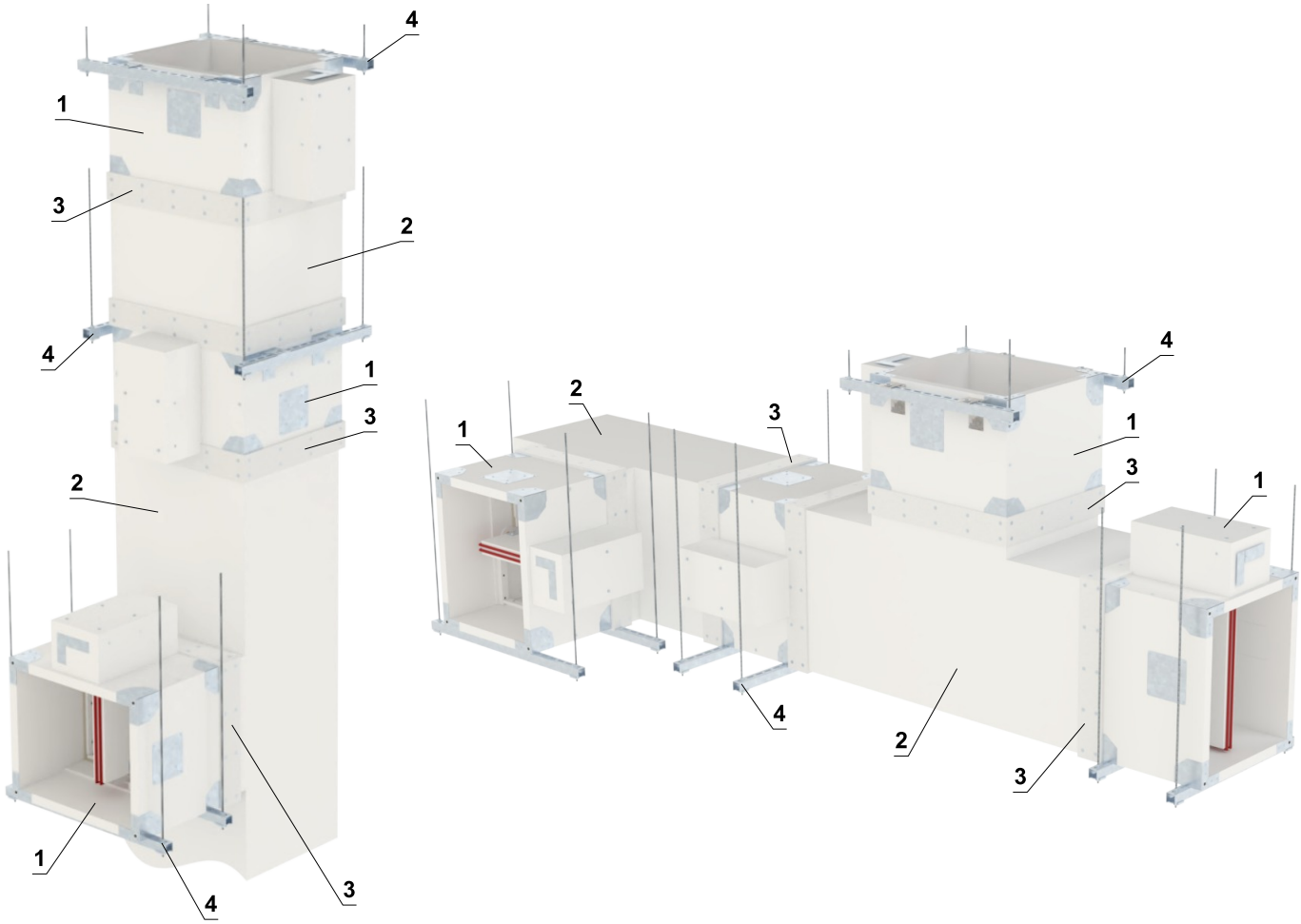

1 SEDM
2 Smoke extraction duct made of calcium silicate boards (e.g. PROMATECT-L500, th. 40 mm)
3 Connecting strip (e.g. PROMATECT-H, th. 10 mm, width 100 mm) - screwed across the gap between the damper body and the adjacent duct using 5×50 mm screws at a spacing of max. 200 mm. Joints between the damper, duct segment and connecting strip sealed with adhesive (e.g. PROMAT K84).
4 Suspension system (type according to duct manufacturer instructions)

(continued on next page)

continuation of installation damper into/onto horizontal or vertical smoke extraction duct made of calcium silicate boards

- The damper is connected to the smoke extraction duct made of calcium silicate boards (e.g. PROMATECT-L500, th. 40 mm) as follow:
  - Using a connecting strip (e.g. PROMATECT-H, th. 10 mm, width 100 mm) - screwed across the gap between the damper body and the adjacent duct using 5×50 mm screws at a spacing of max. 200 mm. Joints between the damper, duct segment and connecting strip sealed with adhesive (e.g. PROMAT K84).

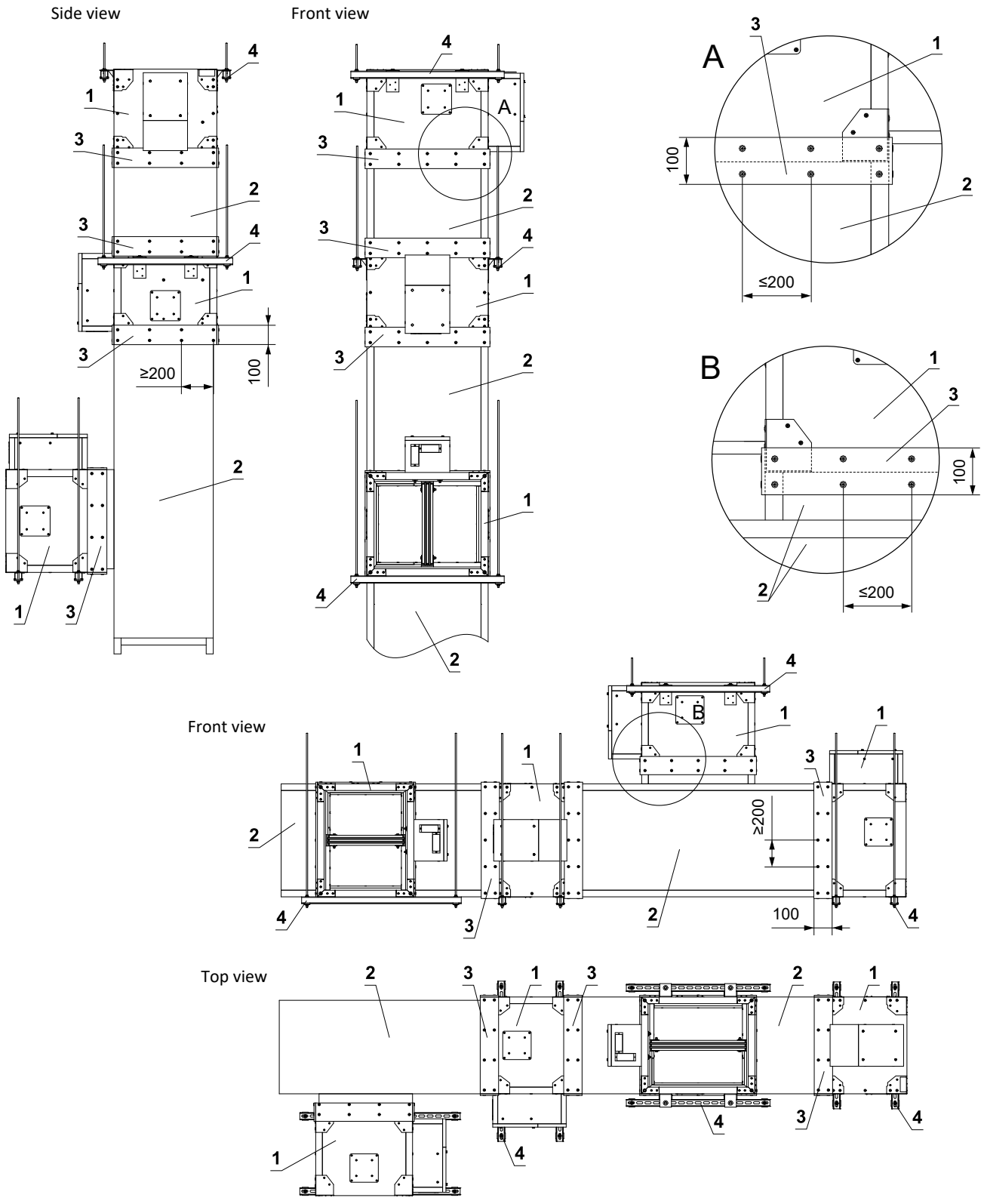

1 SEDM
2 Smoke extraction duct made of calcium silicate boards (e.g. PROMATECT-L500, th. 40 mm)
3 Connecting strip (e.g. PROMATECT-H, th. 10 mm, width 100 mm) - screwed across the gap between the damper body and the adjacent duct using 5×50 mm screws at a spacing of max. 200 mm. Joints between the damper, duct segment and connecting strip sealed with adhesive (e.g. PROMAT K84).
4 Suspension system (type according to duct manufacturer instructions)

V. SUSPENSION SYSTEMS

Mounting to the ceiling wall

- The dampers must be suspended using threaded rods and mounting profiles. Their dimensioning depend on the weight of the damper.
- The dampers and the duct must be suspended separately.
- Following air-conditioning duct must be suspended or supported so that all load transfer from the following duct to the damper flanges is absolutely excluded. Adjacent duct must be suspended or supported, as required by the duct suppliers.

Examples of anchoring to the ceiling construction
Follow the instructions of fixing specialist or installation company

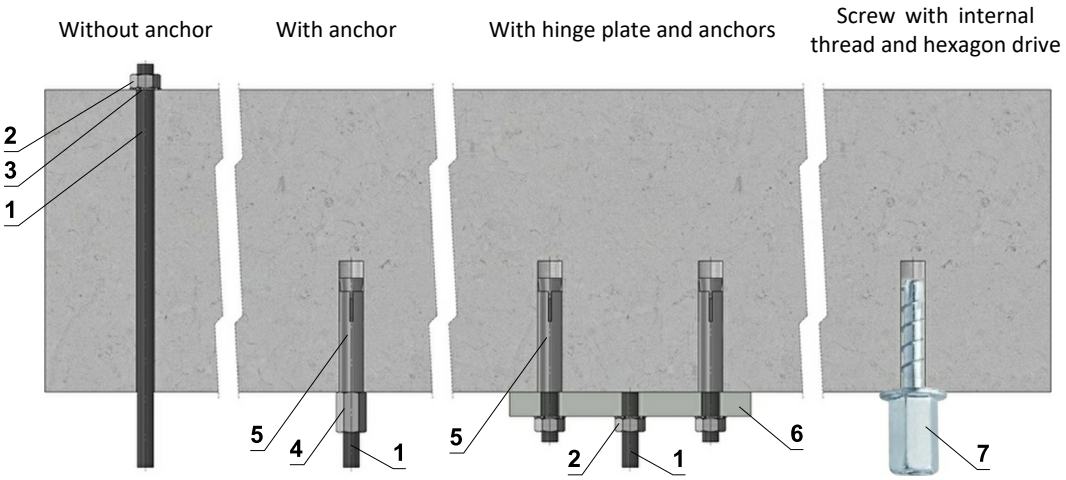

Hinge plates

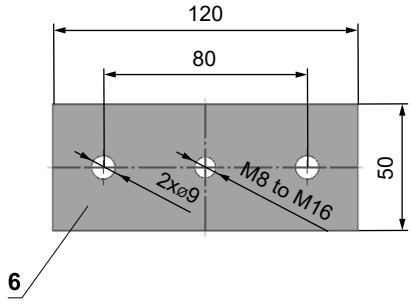

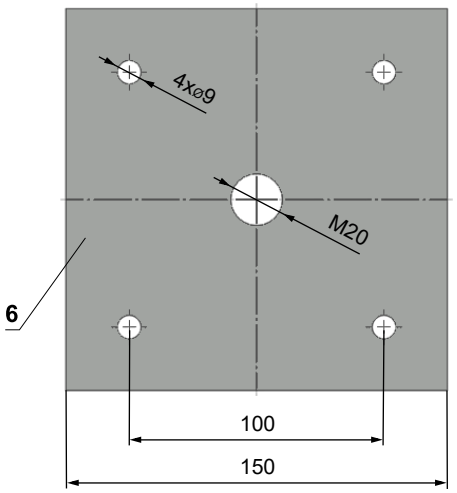

- If in doubt, always consult an anchor specialist engineer such as Halfen or Hilti.

1 Threaded rod M8 - M20
2 Nut M8 - M20
3 Washer for M8 - M20
4 Coupling Nut M8 - M20
5 Anchor
6 Hinge plate - min. thickness 10 mm
7 Concrete screw tested for fire resistance R30-R90, max. Tension up to 0.75 KN (length 35 mm)

Load capacities of threaded rods at the required fire resistance 60 min. < t ≤ 120 min.

Size	As [mm²]	Weight [kg]	
		for 1 rod	for 2 rods
M8	36,6	22	44
M10	58	35	70
M12	84,3	52	104
M16	157	96	192
M18	192	117	234
M20	245	150	300

Example of placing of mounting profiles HILTI

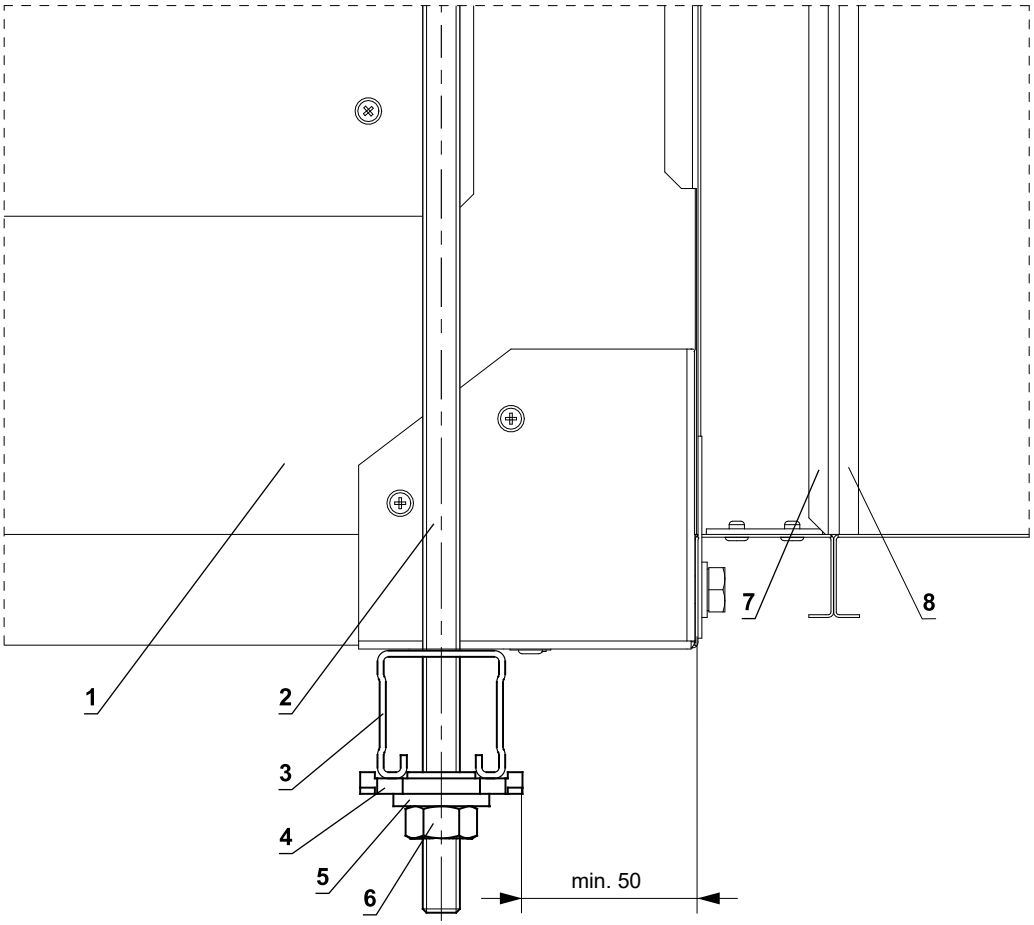

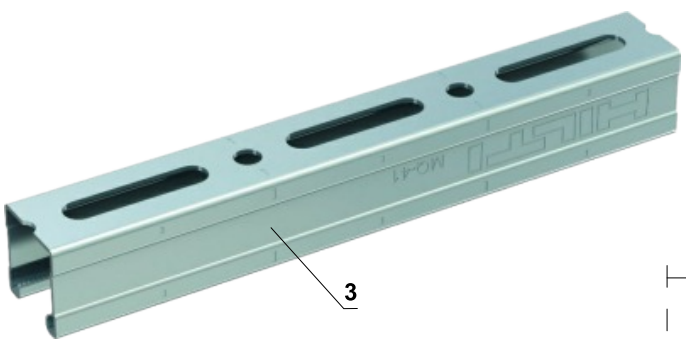

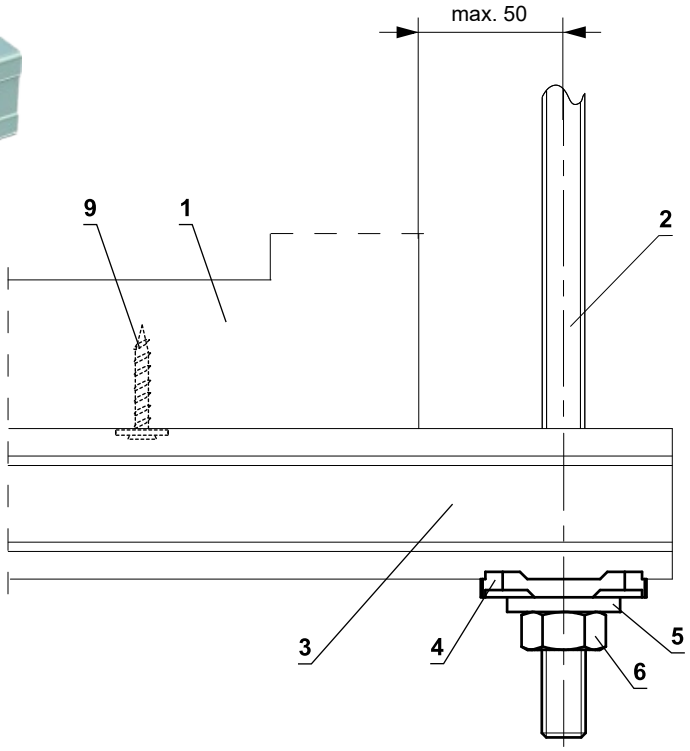

1 SEDM
2 Threaded rod M8 - M12
3 Support HILTI MQ-41 or MQ-41/3
4 Bored plate HILTI MQZ-L
5 Washer for M8 - M12
6 Nut M8 - M12
7 Flange of SEDM
8 Flange of duct
9 Self-tapping screw 5x30 mm and 1 pcs large washer M5 (for additional fixing, prevents the damper from sliding off the support - not necessary use)

Fixing SEDM according to size, with L-holder - fixing on wall / ceiling

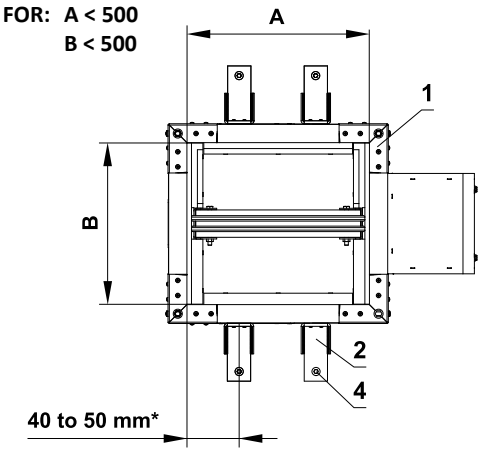

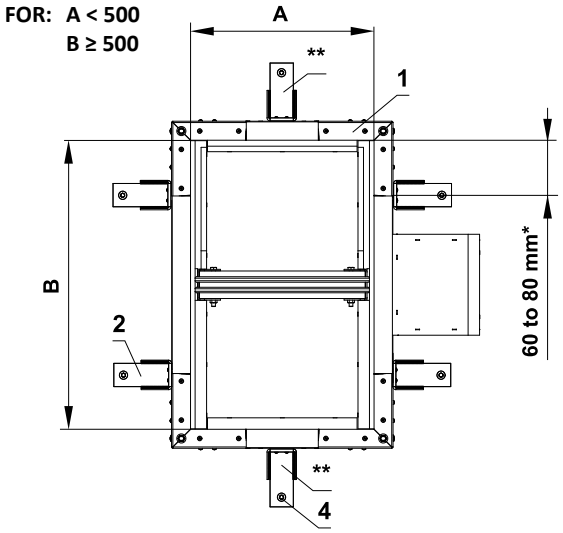

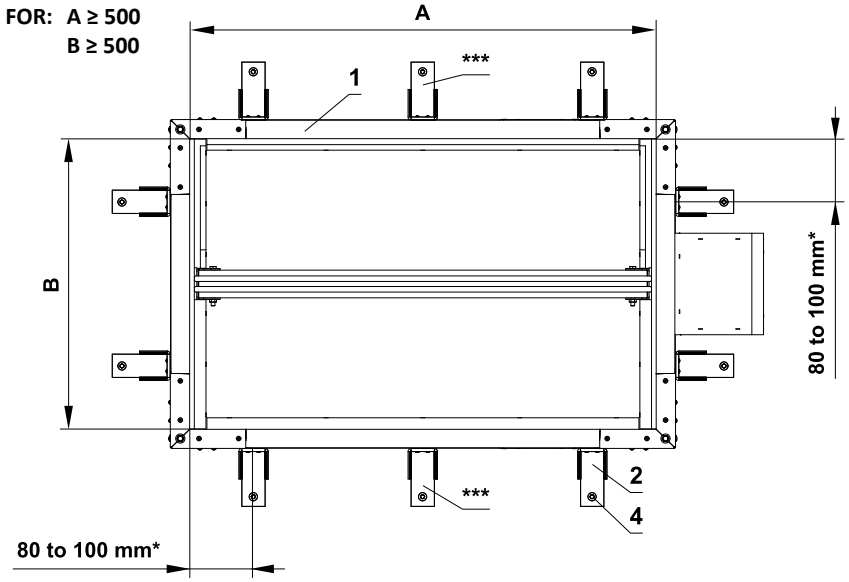

* From inner edge of the damper to the center of the holder, on both sides / opposite sides (mirrored)

** 1 holder to CENTER damper part "A" and on opposite sides (mirrored)

*** In case of A ≥ 1000, add holders to the center of the "A" side.

L-holder for connecting damper on the wall / ceiling (optional accessories MANDIK, a.s.)

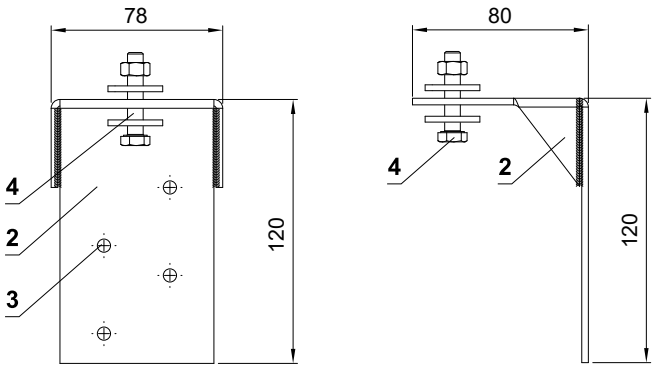

1 SEDM
2 L-holder - optional accessories from MANDIK, a.s.
3 Holes for screw UNI min. 5x30 mm for fastening L-holder to damper body
4 M8 bolt assembly (bolt min. M8x60 mm, 2 pcs large washer, nut M8) or Anchor to concrete, → see page 41

Fixing SEDM according to size - fixing to solid / gypsum or ceiling construction

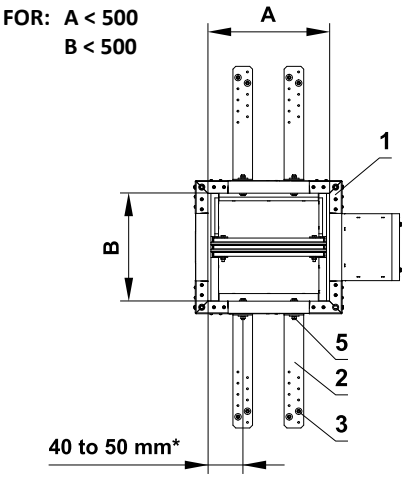

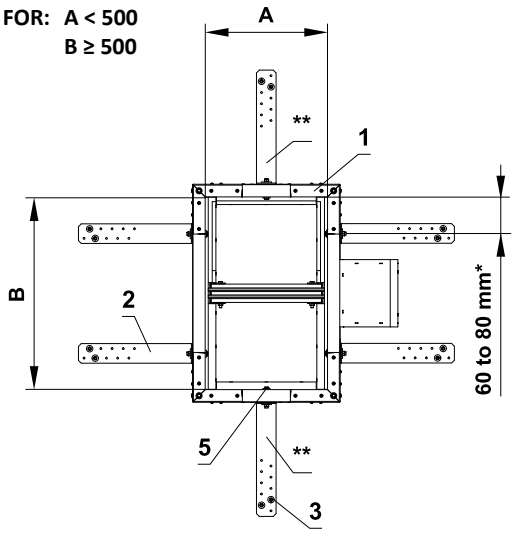

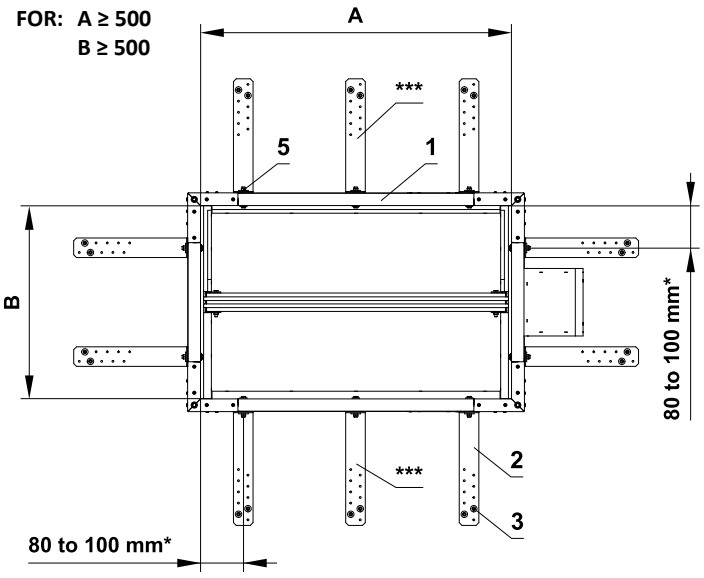

* From inner edge of the damper to the center of the holder, on both sides / opposite sides (mirrored)

** 1 holder to CENTER damper part "A" and on opposite sides (mirrored)

*** In case of A ≥ 1000, add holders to the center of the "A" side.

Installation holder for connecting damper to the construction (optional accessories MANDIK, a.s.)

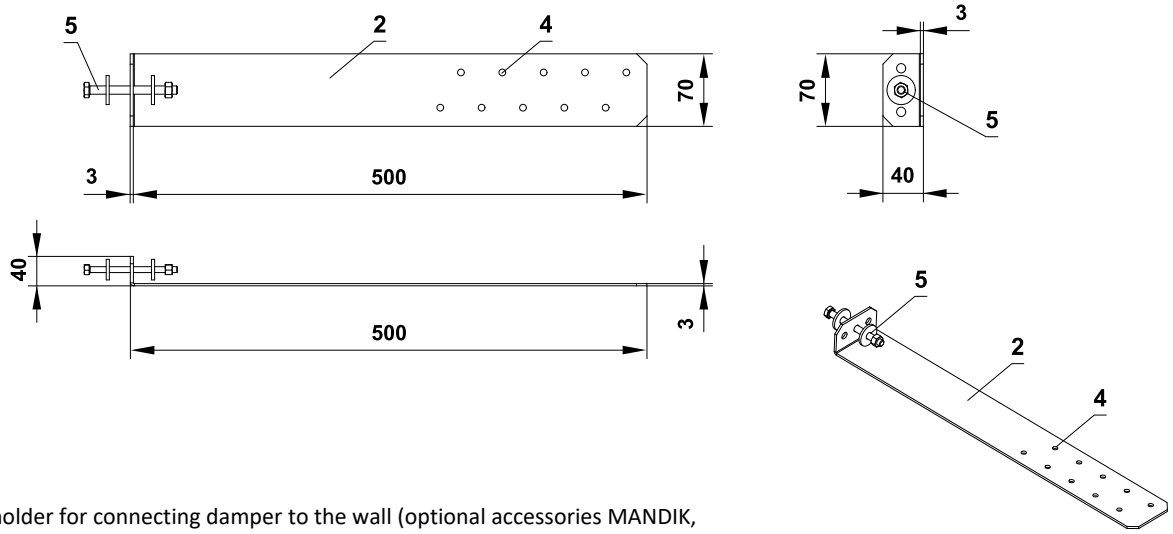

1 SEDM
2 Installation holder for connecting damper to the wall (optional accessories MANDIK, a.s. or sheet metal min. thickness 2 mm and min. width 60 mm)
3 Anchor to concrete min. M6 or Screw UNI 6x60 mm to Gypsum grid from "C" profile
4 Installation hols
5 M8 bolt assembly (bolt M8x55 mm, 2 pcs large washer M8, nut M8)

■ Details of fixing the holder to the construction → see pages 45 to 46

Fixing SEDM to the solid (ceiling) wall construction with Ablative Coated Batt

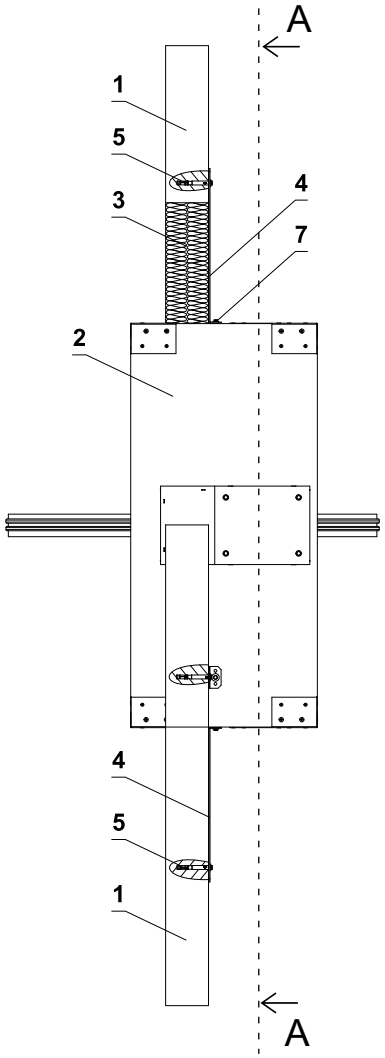

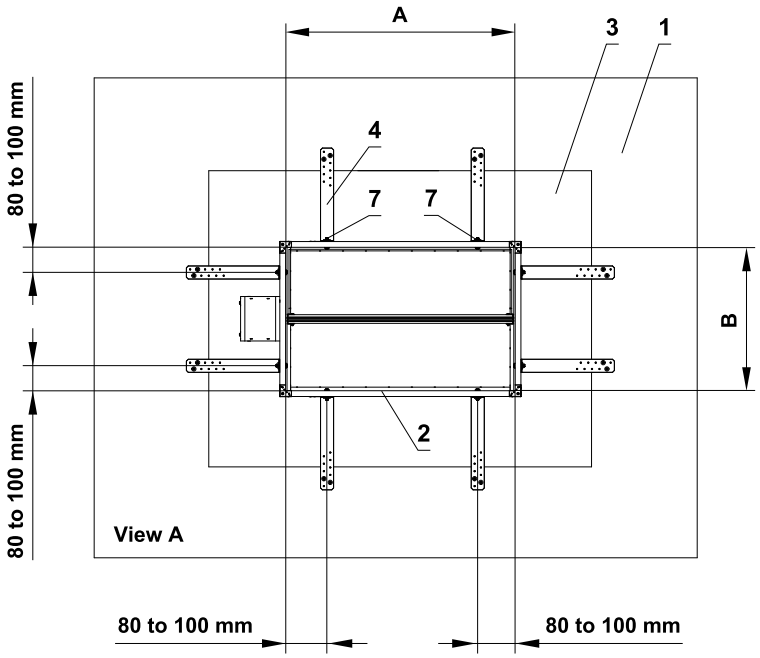

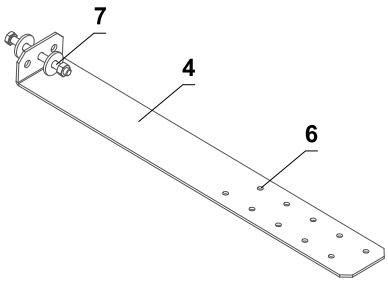

* **RESPECT JOINT POSITION !**
Bolts and nuts shall not prevent free rotation on the blades.

1 Solid wall construction
2 SEDM
3 Ablative Coated Batt
4 Installation holder for connecting damper to the wall (optional accessories MANDIK, a.s. or sheet metal min. thickness 2 mm and min. width 60 mm). Full drawing of bracket, → see page 44
5 Anchor to concrete min. M6
6 Installation hols
7 M8 bolt assembly (bolt M8x55 mm, 2 pcs large washer M8, nut M8) *

- The method of mounting must meet the minimum requirements for attachment in accordance with national regulations.

Fixing SEDM to the gypsum wall construction with Ablative Coated Batt

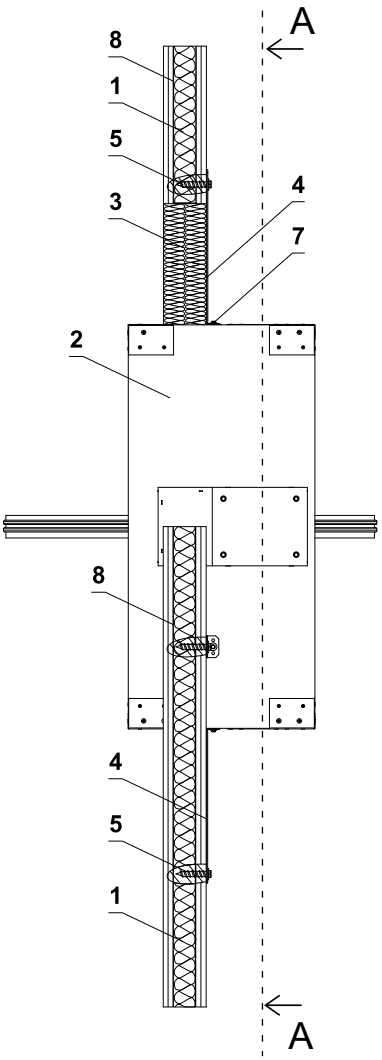

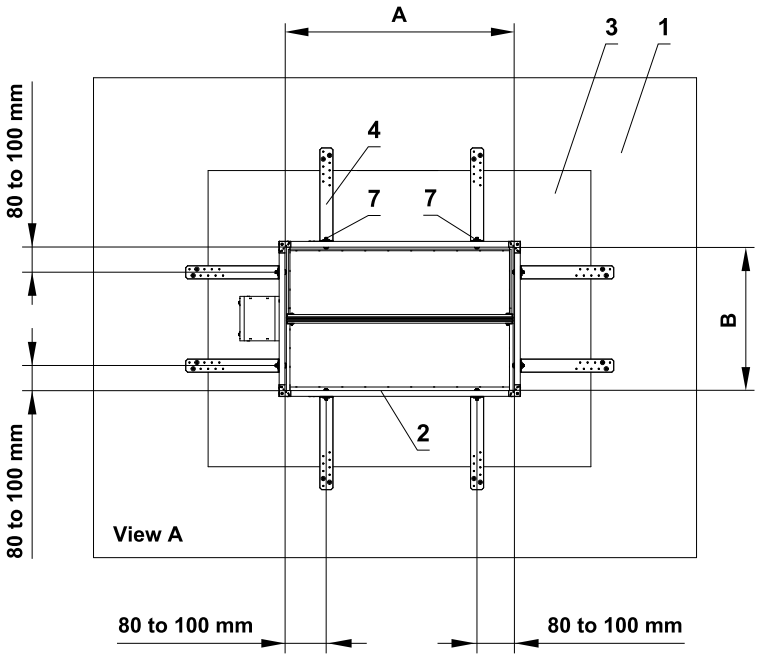

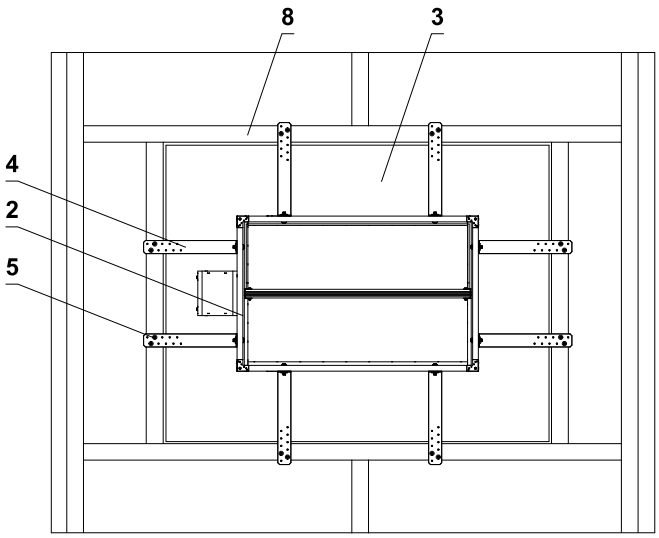

View A - grid from "C" profile

* **RESPECT JOINT POSITION !**
Bolts and nuts shall not prevent free rotation on the blades.

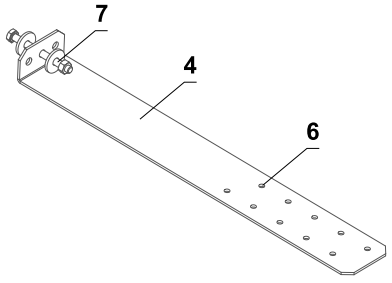

1 Gypsum wall construction
2 SEDM
3 Ablative Coated Batt
4 Installation holder for connecting damper to the wall (optional accessories MANDIK, a.s. or sheet metal min. thickness 2 mm and min. width 60 mm). Full drawing of bracket, → see page 44
5 Screw UNI 6x60 mm
6 Installation hols
7 M8 bolt assembly (bolt M8x55 mm, 2 pcs large washer M8, nut M8) *
8 Gypsum grid from "C" profile

- The method of mounting must meet the minimum requirements for attachment in accordance with national regulations.

Example of duct connection

Flange connection

Connection to smoke extract duct acc. to EN 1366-8 (MULTI) / to EN 1366-9 (SINGLE)

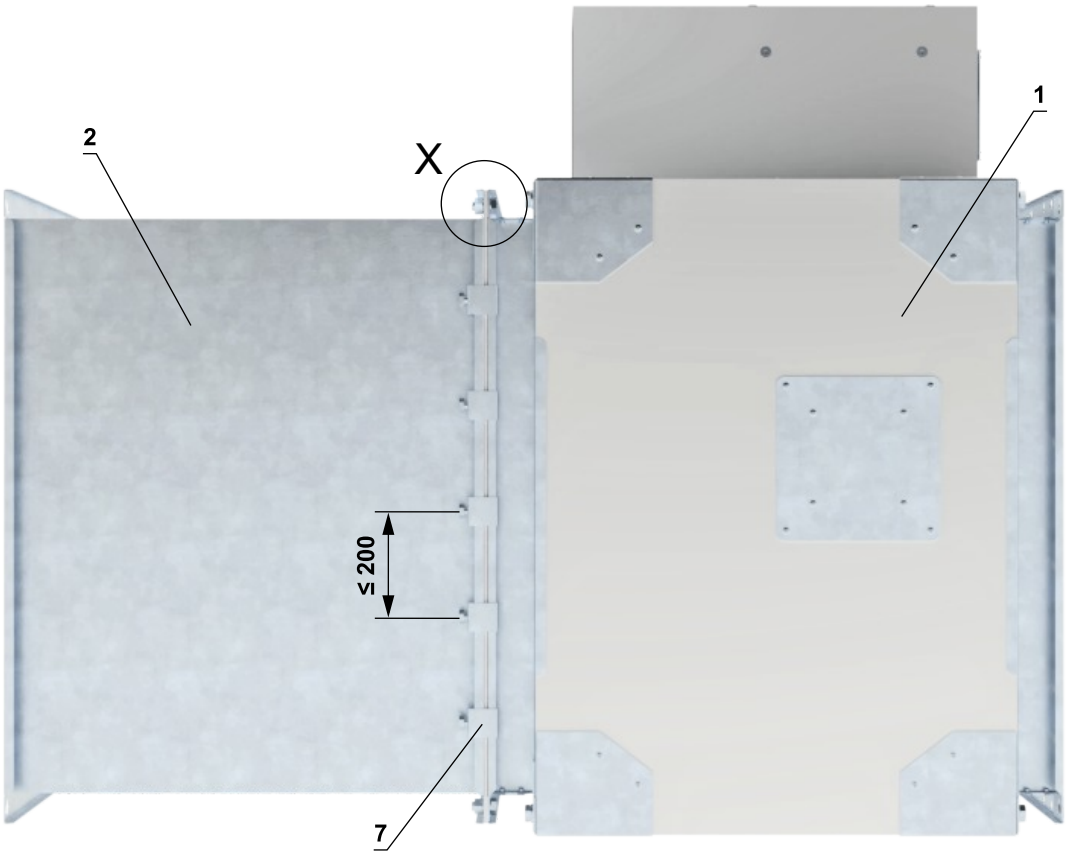

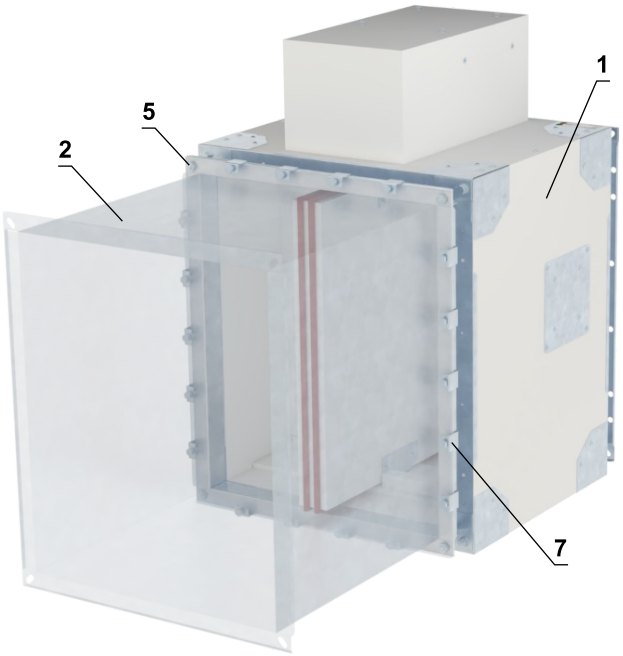

Electrically conductive connection

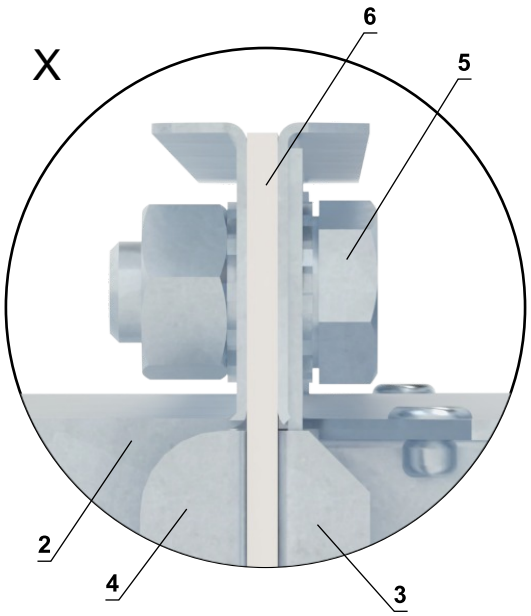

1 SEDM
2 Smoke extraction duct - tested according to EN 1366-8 or EN 1366-9
3 Flange of SEDM
4 Flange of duct
5 M8 bolt assembly (bolt M8x20 mm, 2 pcs large washer M8, nut M8) *
6 Ceramic selfadhesive sealing tape - arround the duct circumference (type according to duct manufacturer instructions)
7 M8 C-clamps - maximum spacing of C-clamps 200 mm (type according to duct manufacturer instructions)

* min. one connection must be electrically conductive

VI. ACCESSORIES

Cover grille KMM

- The grilles type KMM (TPM 002/96) can be used to close smoke control dampers.
- For the installation of the grille, the overlap of the damper blade has to be respected → see pages 11 to 22. In case of blade overlap, the damper must be equipped with an extension piece ("duct").
- Free area value for KMM is 78%.
- These grilles are available in all sizes of the SEDM

SEDM with cover grille without flange

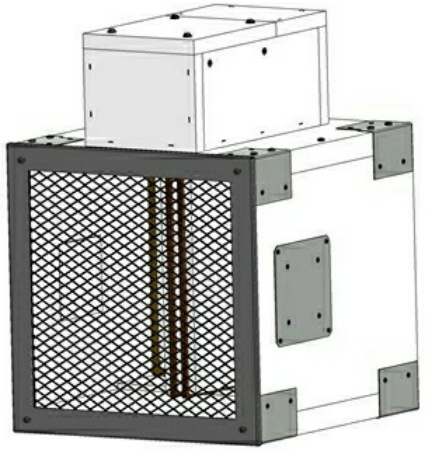

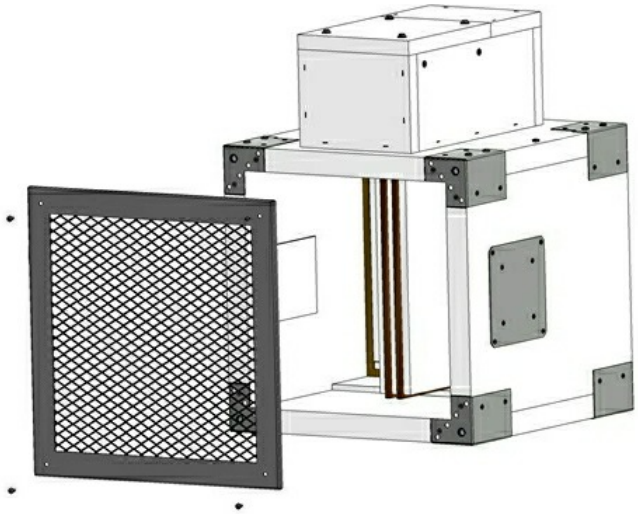

SEDM with cover grille and with flange

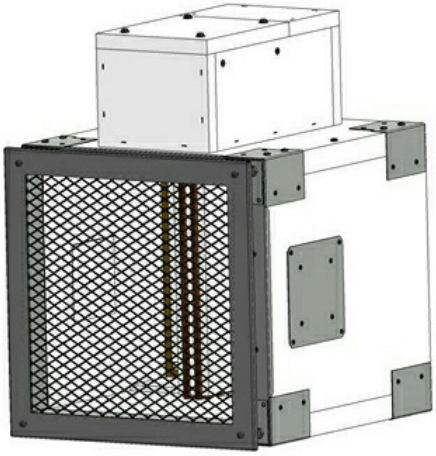

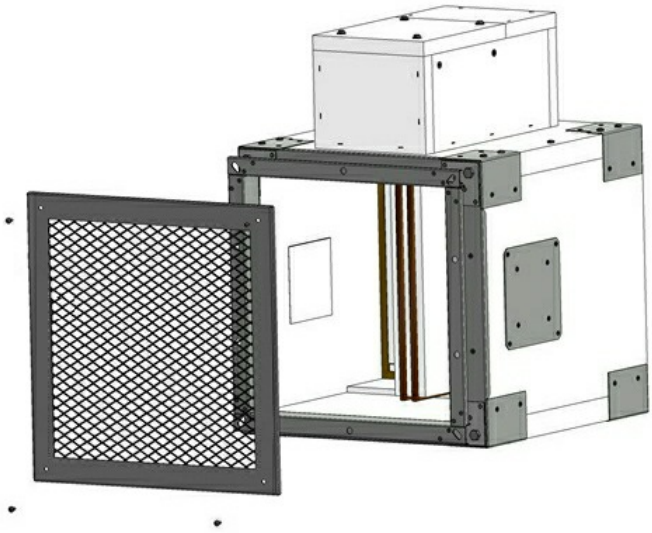

VII. TECHNICAL DATA

Pressure loss

Pressure loss calculation

$$\Delta p = \xi \cdot \rho \cdot \frac{w^2}{2}$$

Δp	[Pa]	pressure loss
w	[m/s]	air flow speed in nominal damper section
ρ	[kg/m³]	air density
ξ	[-]	coefficient of local pressure loss for the nominal damper section → see page 50

Determination of pressure loss by using diagram ρ = 1,2 kg/m³

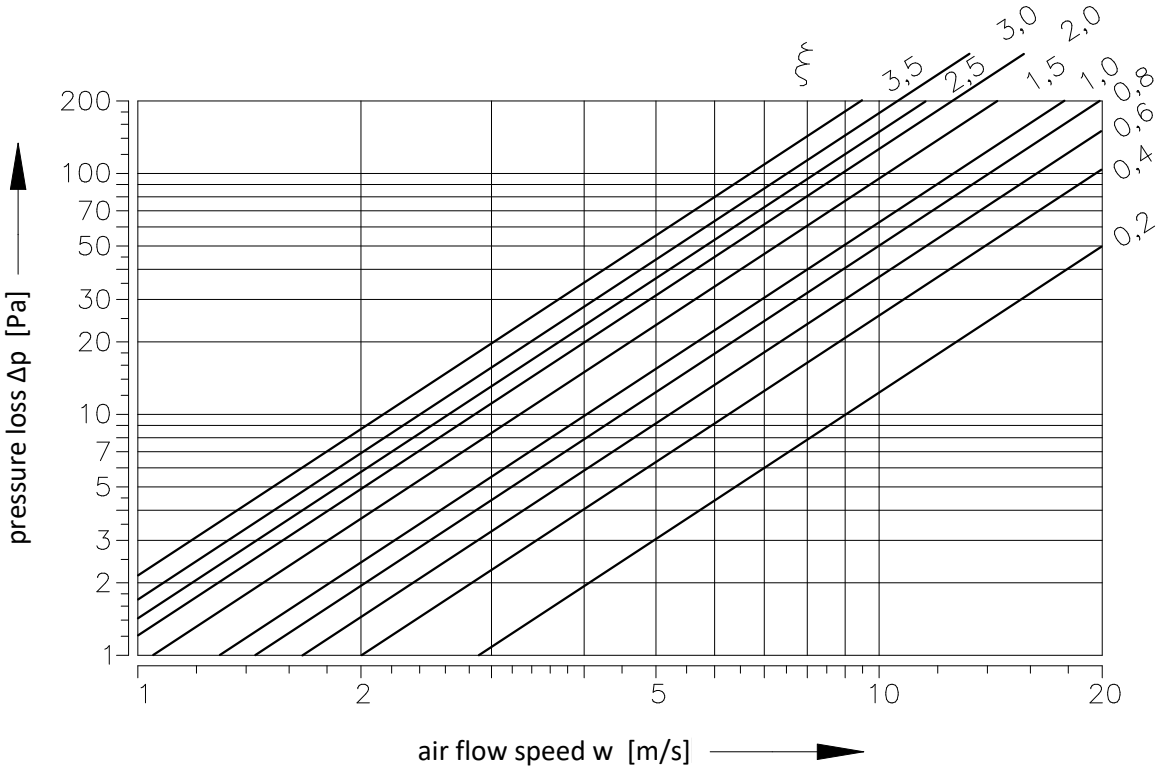

Coefficient of local pressure loss

						B					
A	**180**	**200**	**225**	**250**	**280**	**300**	**315**	**355**	**400**	**450**	**500**
180	3,1433	2,5092	2,0162	1,6711	1,4773	1,3192	1,1951	1,0336	0,9095	0,8126	0,7429
200	2,9529	2,3545	1,9584	1,5657	1,3991	1,2512	1,1186	0,9673	0,8500	0,7582	0,6919
225	2,7795	2,2032	1,8326	1,4909	1,3226	1,1594	1,0438	0,9231	0,8143	0,7157	0,6562
250	2,6401	2,1012	1,7204	1,3923	1,2172	1,0795	0,9911	0,8568	0,7514	0,6698	0,6120
280	2,5721	2,0417	1,6677	1,3413	1,1577	1,0506	0,9333	0,8313	0,7242	0,6375	0,5984
300	2,5075	1,9822	1,5725	1,2784	1,1373	1,0081	0,9078	0,8075	0,7055	0,6239	0,5627
315	2,4055	1,9108	1,5283	1,2376	1,0897	0,9843	0,8806	0,7752	0,6800	0,6052	0,5525
355	2,3103	1,8343	1,4552	1,2121	1,0676	0,9265	0,8602	0,7412	0,6511	0,5797	0,5287
400	2,2304	1,7697	1,3787	1,1679	1,0217	0,9044	0,8279	0,7140	0,6256	0,5576	0,5083
450	2,1607	1,7153	1,3413	1,1305	1,0013	0,8823	0,8007	0,6902	0,6052	0,5389	0,4913
500	2,1080	1,6711	1,3362	1,1016	0,9452	0,8483	0,7633	0,6715	0,5882	0,5236	0,4777
550	2,0723	1,6507	1,2971	1,0829	0,9231	0,8194	0,7514	0,6613	0,5797	0,5185	0,4726
560	2,0587	1,6320	1,2886	1,0744	0,9061	0,8211	0,7429	0,6545	0,5729	0,5100	0,4658
600	2,0247	1,6116	1,2801	1,0659	0,8959	0,8041	0,7327	0,6443	0,5627	0,5066	0,4590
630	2,0128	1,5946	1,2733	1,0489	0,8857	0,7871	0,7259	0,6392	0,5593	0,4981	0,4539
650	2,0043	1,5742	1,2546	1,0421	0,8687	0,7786	0,7225	0,6324	0,5559	0,4947	0,4505
700	1,9873	1,5674	1,2512	1,0319	0,8517	0,7701	0,7157	0,6290	0,5508	0,4913	0,4471
710	1,9720	1,5623	1,2274	1,0268	0,8534	0,7548	0,7089	0,6256	0,5474	0,4879	0,4437
750	1,9567	1,5419	1,2172	1,0183	0,8483	0,7497	0,6987	0,6188	0,5406	0,4845	0,4386
800	1,9380	1,5351	1,2087	1,0081	0,8432	0,7446	0,6953	0,6137	0,5372	0,4777	0,4352
900	1,9074	1,5096	1,2053	0,9911	0,8228	0,7259	0,6834	0,6035	0,5270	0,4692	0,4284
1000	1,8836	1,4909	1,2002	0,9792	0,7939	0,7106	0,6749	0,5950	0,5202	0,4641	0,4216
1100	1,8615	1,4739	1,1917	0,9673	0,7752	0,7004	0,6664	0,5865	0,5134	0,4573	0,4165
1250	1,8428	1,4569	1,1781	0,9554	0,7735	0,6987	0,6579	0,5814	0,5083	0,4522	0,4114
1400	1,8241	1,4433	1,1696	0,9469	0,7718	0,6970	0,6511	0,5746	0,5032	0,4471	0,4080
1500	1,8139	1,4348	1,1611	0,9418	0,7684	0,6936	0,6477	0,5712	0,4998	0,4454	0,4046
1600	1,8054	1,4280	1,1169	0,9367	0,7667	0,6902	0,6443	0,5678	0,4981	0,4420	0,4029

						B					
A	**550**	**560**	**600**	**630**	**650**	**700**	**710**	**750**	**800**	**900**	**1000**
180	0,6987	0,6800	0,6477	0,6273	0,5984	0,5933	0,5831	0,5627	0,5474	0,5168	0,4947
200	0,6545	0,6341	0,6052	0,5848	0,5627	0,5525	0,5440	0,5304	0,5100	0,4828	0,4607
225	0,6188	0,5916	0,5712	0,5559	0,5355	0,5287	0,5134	0,5032	0,4777	0,4556	0,4318
250	0,5882	0,5610	0,5372	0,5168	0,4998	0,4913	0,4862	0,4726	0,4488	0,4335	0,4063
280	0,5559	0,5304	0,5151	0,4947	0,4828	0,4794	0,4726	0,4471	0,4301	0,4216	0,3927
300	0,5321	0,5202	0,4947	0,4743	0,4675	0,4624	0,4573	0,4267	0,4182	0,4029	0,3808
315	0,5134	0,5049	0,4692	0,4658	0,4471	0,4386	0,4318	0,4097	0,4046	0,3825	0,3655
355	0,4896	0,4828	0,4556	0,4454	0,4318	0,4216	0,4131	0,3961	0,3876	0,3655	0,3485
400	0,4743	0,4641	0,4471	0,4284	0,4182	0,4097	0,3978	0,3842	0,3723	0,3519	0,3349
450	0,4556	0,4488	0,4352	0,4131	0,4046	0,3927	0,3842	0,3757	0,3587	0,3383	0,3230
500	0,4505	0,4369	0,4182	0,4012	0,3876	0,3791	0,3723	0,3587	0,3485	0,3298	0,3145
550	0,4437	0,4267	0,4148	0,3978	0,3808	0,3757	0,3655	0,3519	0,3451	0,3247	0,3111
560	0,4386	0,4250	0,4097	0,3910	0,3757	0,3723	0,3638	0,3451	0,3400	0,3213	0,3060
600	0,4369	0,4199	0,3978	0,3876	0,3672	0,3638	0,3587	0,3434	0,3366	0,3162	0,3026
630	0,4301	0,4148	0,3927	0,3825	0,3621	0,3570	0,3536	0,3417	0,3315	0,3128	0,2992
650	0,4267	0,4097	0,3927	0,3808	0,3604	0,3553	0,3502	0,3400	0,3298	0,3111	0,2975
700	0,4250	0,4080	0,3859	0,3791	0,3587	0,3536	0,3485	0,3383	0,3281	0,3077	0,2941
710	0,4216	0,4063	0,3808	0,3740	0,3570	0,3502	0,3468	0,3349	0,3247	0,3060	0,2924
750	0,4199	0,4029	0,3757	0,3706	0,3553	0,3468	0,3434	0,3315	0,3213	0,3026	0,2873
800	0,4182	0,3978	0,3757	0,3655	0,3536	0,3451	0,3400	0,3281	0,3179	0,2992	0,2856
900	0,4148	0,3910	0,3757	0,3604	0,3519	0,3417	0,3332	0,3179	0,3128	0,2941	0,2805
1000	0,4012	0,3859	0,3706	0,3553	0,3502	0,3349	0,3281	0,3145	0,3077	0,2907	0,2771
1100	0,3927	0,3808	0,3587	0,3502	0,3417	0,3298	0,3247	0,3094	0,3043	0,2856	0,2737
1250	0,3876	0,3757	0,3536	0,3451	0,3383	0,3281	0,3213	0,3077	0,2992	0,2822	0,2703
1400	0,3825	0,3723	0,3502	0,3417	0,3332	0,3264	0,3179	0,3043	0,2975	0,2805	0,2669
1500	0,3791	0,3706	0,3485	0,3400	0,3298	0,3247	0,3162	0,3026	0,2958	0,2788	0,2652
1600	0,3774	0,3672	0,3451	0,3383	0,3264	0,3230	0,3145	0,2992	0,2941	0,2771	0,2635

Noise data - level of acoustic output corrected with filter A

Air velocity 4 m/s
Level of acoustic output [dB]

	B																					
A	**180**	**200**	**225**	**250**	**280**	**300**	**315**	**355**	**400**	**450**	**500**	**550**	**560**	**600**	**630**	**650**	**700**	**710**	**750**	**800**	**900**	**1000**
180	56	49	48	46	44	42	41	41	40	40	40	40	40	40	40	40	40	38	38	37	38	38
200	52	48	45	44	41	41	41	41	40	40	39	39	39	38	38	38	37	37	37	36	37	37
225	50	47	45	40	40	40	41	40	39	39	39	38	38	36	36	37	37	36	36	36	36	36
250	49	45	44	42	40	40	40	39	38	38	37	37	37	37	37	37	37	37	37	36	36	36
280	47	45	40	40	40	39	38	37	37	37	37	37	37	36	36	36	36	36	36	36	35	35
300	47	44	40	40	39	39	39	37	36	37	37	37	37	35	35	35	35	35	36	36	36	35
315	47	44	40	40	39	39	37	37	37	36	36	36	36	36	36	36	36	35	35	35	34	34
355	46	43	40	39	39	37	37	36	36	36	36	35	35	35	35	35	35	35	33	34	35	35
400	47	42	40	39	37	37	36	36	36	35	35	35	35	35	35	35	34	34	34	34	33	33
450	45	42	40	39	37	37	37	36	35	35	35	35	35	35	35	35	35	35	34	34	34	34
500	45	40	39	38	37	36	36	36	35	35	35	34	34	33	33	34	34	34	33	33	33	33
550	44	40	40	38	37	37	36	36	35	35	34	34	34	34	34	33	33	33	33	33	33	33
560	44	40	40	38	37	37	36	35	35	35	34	34	34	34	34	34	33	33	33	33	33	33
600	44	40	38	36	36	36	36	36	35	35	35	35	35	33	33	33	33	32	32	32	32	32
630	44	40	38	37	36	36	36	35	35	35	34	34	34	34	34	34	33	33	33	33	32	32
650	44	40	38	37	36	36	36	35	35	35	34	34	34	34	34	34	33	33	33	33	33	33
700	43	39	38	38	36	36	36	37	35	36	34	34	34	34	34	33	33	33	33	33	33	33
710	43	39	38	38	36	36	36	37	35	36	34	34	34	34	34	33	33	33	33	33	33	33
750	43	40	38	37	36	35	35	34	34	34	34	34	33	33	33	33	33	33	33	33	33	33
800	43	40	37	37	36	36	35	34	34	34	34	33	33	33	33	33	33	33	33	33	33	33
900	43	40	37	36	36	36	35	34	34	34	34	33	33	33	33	33	33	33	33	33	33	33
1000	43	39	37	37	37	36	35	35	34	34	34	33	33	33	33	33	33	33	33	33	33	33
1100	42	39	37	37	37	35	35	34	34	34	33	33	33	33	33	33	33	33	32	32	32	32
1250	42	39	37	37	37	35	35	34	34	34	34	34	33	33	33	33	33	33	32	32	32	32
1400	42	39	37	37	37	35	35	34	34	34	33	33	33	33	33	33	33	33	32	32	32	31
1500	42	39	37	37	37	35	35	34	34	34	33	33	33	33	33	33	33	33	32	32	32	31
1600	42	39	37	37	37	35	35	34	34	34	33	33	33	33	33	33	33	33	32	32	32	31

Air velocity 5 m/s
Level of acoustic output [dB]

	B																					
A	**180**	**200**	**225**	**250**	**280**	**300**	**315**	**355**	**400**	**450**	**500**	**550**	**560**	**600**	**630**	**650**	**700**	**710**	**750**	**800**	**900**	**1000**
180	>55	55	53	52	49	47	48	47	47	47	46	46	46	46	46	45	45	45	45	45	45	45
200	>55	55	52	49	48	48	47	47	47	45	45	45	44	44	44	44	45	45	45	45	45	45
225	>55	54	50	48	47	47	47	45	44	44	44	44	44	44	44	44	44	44	44	44	44	43
250	>55	52	49	48	47	46	46	44	44	44	44	44	44	44	43	43	43	43	43	43	43	43
280	54	50	49	47	46	45	45	44	44	44	43	43	43	43	42	42	42	42	42	42	42	42
300	54	49	47	46	45	45	44	44	43	43	43	43	43	42	42	42	42	41	42	42	42	41
315	54	51	48	47	45	45	44	44	44	43	43	42	42	41	41	41	41	41	41	41	41	41
355	54	50	48	45	44	43	43	43	42	42	42	41	41	41	41	41	41	41	41	41	40	40
400	54	49	46	45	43	43	43	43	42	42	41	40	40	40	40	40	40	40	40	40	40	40
450	52	47	46	43	42	42	42	41	41	40	40	40	40	40	40	40	40	40	40	39	39	39
500	51	48	46	44	43	43	43	41	41	40	40	40	40	40	40	40	40	40	39	39	39	39
550	49	47	46	44	43	43	42	41	40	40	40	40	40	40	40	39	39	39	39	39	39	38
560	49	47	46	44	43	43	42	41	40	40	40	40	40	40	40	39	39	39	39	39	39	38
600	50	47	45	43	43	42	42	41	40	40	40	40	40	40	39	39	39	39	39	38	38	38
630	50	48	45	43	43	42	42	41	40	40	40	40	40	40	40	40	40	40	38	38	38	38
650	50	48	45	43	42	42	42	41	40	40	40	40	39	39	39	39	39	38	38	38	38	38
700	50	48	45	42	42	42	42	41	40	40	40	40	39	39	39	39	39	38	38	38	38	38
710	50	48	45	42	42	42	42	41	40	40	40	40	39	39	39	39	39	38	38	38	38	38
750	50	47	45	42	42	42	42	41	40	40	40	40	39	39	39	39	39	38	38	38	38	38
800	50	47	45	42	42	42	42	41	40	40	40	40	39	39	39	39	39	38	38	38	38	38
900	49	47	44	42	42	42	41	40	40	40	40	39	39	39	39	39	38	38	38	38	38	38
1000	49	47	43	42	42	42	40	40	40	40	40	39	39	39	39	38	38	38	38	38	38	38
1100	49	47	43	42	42	42	40	40	40	40	40	39	39	39	39	38	38	38	38	38	38	38
1250	49	47	43	42	42	42	40	40	40	40	39	39	39	39	38	38	38	38	38	38	38	38
1400	48	46	43	42	42	41	40	40	40	39	38	38	38	38	38	38	38	38	38	38	38	37
1500	48	46	43	42	41	41	40	40	40	39	38	38	38	38	38	38	38	38	38	38	38	37
1600	48	46	43	42	41	41	40	40	40	39	38	38	38	38	38	38	38	38	38	38	38	37

Air velocity 6 m/s
Level of acoustic output [dB]

	B																					
A	**180**	**200**	**225**	**250**	**280**	**300**	**315**	**355**	**400**	**450**	**500**	**550**	**560**	**600**	**630**	**650**	**700**	**710**	**750**	**800**	**900**	**1000**
180	>55	>55	>55	>55	55	54	54	54	54	52	52	52	52	52	52	52	52	52	51	51	51	51
200	>55	>55	>55	55	54	54	53	53	52	51	50	50	50	50	50	50	50	50	50	50	50	48
225	>55	>55	>55	54	52	52	52	51	50	50	49	48	48	48	48	48	48	48	48	48	47	47
250	>55	>55	55	53	52	52	51	50	50	49	48	48	48	47	47	47	47	47	47	47	47	47
280	>55	>55	54	52	51	50	50	49	48	48	48	47	46	46	46	46	46	46	46	46	46	46
300	>55	>55	54	52	50	50	50	48	47	47	46	46	46	46	46	46	46	46	46	46	47	45
315	>55	55	53	52	50	49	50	48	47	46	46	46	46	46	46	46	46	46	47	47	46	46
355	>55	55	53	51	50	49	48	47	47	46	46	46	46	46	46	46	46	46	46	46	46	46
400	>55	54	52	50	49	48	48	47	45	45	45	45	45	45	45	45	45	45	45	45	45	45
450	>55	54	51	50	48	48	47	46	45	45	45	45	45	45	45	45	45	45	45	45	45	45
500	55	54	51	49	48	48	47	45	45	45	45	45	45	45	45	45	45	45	45	45	43	43
550	55	53	50	50	48	47	45	45	45	45	45	45	45	45	45	45	45	45	45	44	44	44
560	55	53	50	50	48	47	45	45	45	45	45	45	45	45	45	45	45	45	45	44	44	44
600	55	53	50	50	48	47	45	45	45	45	45	45	45	44	44	44	44	44	44	44	44	44
630	55	53	50	49	48	47	45	45	45	45	45	45	44	44	44	44	44	44	44	44	44	44
650	55	52	50	49	48	47	45	45	45	45	45	45	44	44	44	44	44	44	43	43	43	43
700	55	52	50	48	48	46	46	45	45	45	45	45	44	44	44	44	44	44	43	43	43	43
710	55	52	50	48	48	46	46	45	45	45	45	45	44	44	44	44	44	44	43	43	43	43
750	55	52	50	48	48	46	45	45	45	45	45	45	44	44	44	44	44	44	43	43	43	43
800	55	52	50	48	48	46	45	45	45	45	45	45	44	44	44	44	43	43	43	43	43	43
900	55	52	49	48	47	45	45	45	45	45	45	44	43	43	43	43	43	43	43	43	43	43
1000	55	52	49	48	47	45	45	45	45	45	44	44	44	43	43	43	43	43	43	43	43	43
1100	54	52	49	48	46	45	45	45	45	44	44	44	44	43	43	43	43	43	43	43	43	43
1250	54	52	49	47	45	45	45	45	45	44	44	44	44	43	43	43	43	43	43	43	43	43
1400	54	52	48	48	46	44	44	44	45	44	43	43	43	43	43	43	43	43	43	43	43	42
1500	54	52	48	48	45	44	44	44	45	44	43	43	43	43	43	43	43	43	43	43	42	42
1600	54	52	48	48	45	44	44	45	45	45	43	43	43	43	43	43	43	43	43	42	42	42

Air velocity 7 m/s
Level of acoustic output [dB]

	B																					
A	**180**	**200**	**225**	**250**	**280**	**300**	**315**	**355**	**400**	**450**	**500**	**550**	**560**	**600**	**630**	**650**	**700**	**710**	**750**	**800**	**900**	**1000**
180	>61	>61	>61	>61	61	60	60	58	58	57	56	56	56	55	55	55	55	55	55	56	55	55
200	>61	>61	>61	>61	59	58	58	57	56	55	55	55	55	55	55	55	55	54	54	54	54	54
225	>61	>61	>61	60	57	56	56	55	55	55	54	54	53	53	53	53	53	53	53	53	53	53
250	>61	>61	>61	58	56	56	56	55	54	53	53	53	53	53	52	52	52	52	52	53	52	52
280	>61	>61	60	57	56	55	55	54	53	52	52	52	51	51	51	51	51	51	51	51	50	50
300	>61	61	58	57	55	54	54	53	53	52	52	52	52	52	52	50	50	50	50	50	50	50
315	>61	61	57	56	55	55	54	53	52	52	51	51	51	51	50	50	50	50	50	49	49	49
355	>61	61	57	55	54	53	53	52	52	52	51	50	50	50	50	50	49	49	49	48	48	48
400	>61	60	57	55	53	53	53	52	51	51	49	49	49	49	49	48	48	48	48	48	48	48
450	>61	59	56	54	52	52	52	51	50	50	50	48	48	48	48	48	48	48	48	48	48	48
500	60	58	55	54	53	52	52	50	50	50	48	48	48	48	48	48	48	48	48	48	48	48
550	60	58	55	54	53	52	52	50	50	48	48	48	48	48	48	48	48	48	48	48	48	48
560	60	58	55	54	53	52	52	50	50	48	48	48	48	48	48	48	48	48	48	48	48	48
600	60	58	55	54	52	52	51	50	49	48	48	48	48	48	48	48	48	48	48	48	48	48
630	60	58	55	53	51	51	51	50	49	48	48	48	48	48	48	48	48	48	48	48	48	48
650	60	58	55	53	52	51	51	50	49	48	48	48	48	48	48	48	48	48	48	48	48	48
700	59	58	55	53	52	51	51	50	49	48	48	48	48	48	48	48	48	48	48	48	48	48
710	59	58	55	53	52	51	51	50	49	48	48	48	48	48	48	48	48	48	48	48	48	48
750	59	58	55	53	52	51	51	50	49	48	48	48	48	48	48	48	48	48	48	48	48	48
800	59	58	55	53	52	51	51	50	49	48	48	48	48	48	48	48	48	48	48	48	48	48
900	58	56	53	53	52	50	50	48	48	47	48	48	48	48	48	48	48	48	48	48	47	47
1000	58	56	53	53	51	50	50	48	48	48	48	48	48	48	48	48	48	48	48	48	47	47
1100	58	56	53	53	51	50	50	48	48	48	48	48	48	48	48	48	48	48	48	47	47	47
1250	58	56	53	53	51	50	50	48	48	48	48	48	48	48	48	48	48	48	48	47	47	47
1400	58	56	53	52	51	50	48	48	47	47	47	47	47	47	47	47	47	47	47	47	47	46
1500	58	56	53	52	51	50	50	48	47	47	47	47	47	47	47	47	47	47	47	47	47	46
1600	58	56	53	52	51	50	50	48	47	47	47	47	47	47	47	47	47	47	47	47	47	46

Air velocity 8 m/s
Level of acoustic output [dB]

	B																					
A	**180**	**200**	**225**	**250**	**280**	**300**	**315**	**355**	**400**	**450**	**500**	**550**	**560**	**600**	**630**	**650**	**700**	**710**	**750**	**800**	**900**	**1000**
180	>63	>63	>63	>63	>63	>63	>63	63	62	61	61	60	60	60	60	60	60	60	60	60	60	59
200	>63	>63	>63	>63	>63	62	62	61	60	60	60	60	60	60	60	60	60	60	59	59	59	58
225	>63	>63	>63	>63	>63	61	61	60	60	58	58	58	58	58	58	58	58	58	58	57	57	57
250	>63	>63	>63	>63	61	60	60	59	58	58	57	57	57	57	57	57	57	57	56	56	56	56
280	>63	>63	>63	>63	59	59	59	58	58	57	57	56	56	56	56	56	56	56	56	55	55	54
300	>63	>63	62	61	59	59	59	58	57	56	56	55	55	55	55	55	55	55	55	54	54	54
315	>63	>63	62	61	59	59	58	57	57	56	55	55	55	55	55	55	55	55	55	55	54	54
355	>63	>63	63	59	58	58	57	56	55	55	54	54	54	54	54	54	53	53	53	53	53	53
400	>63	63	62	60	58	57	56	56	55	54	54	54	54	54	54	54	53	53	53	53	52	52
450	>63	63	60	58	57	56	56	55	55	55	54	53	53	53	53	53	53	53	53	53	52	52
500	>63	62	60	58	56	55	55	54	54	54	53	53	53	53	53	53	53	53	53	52	51	51
550	>63	62	59	58	56	56	55	55	54	53	53	53	53	53	53	53	53	53	52	52	51	51
560	>63	62	59	58	56	56	55	55	54	53	53	53	53	53	53	53	53	53	52	52	51	51
600	>63	62	59	58	56	55	55	54	54	53	53	53	53	53	52	52	52	51	51	51	50	50
630	>63	62	59	58	56	55	55	54	54	53	53	53	53	53	52	52	52	51	50	50	50	50
650	>63	61	59	58	56	55	55	54	54	53	53	53	52	51	51	51	51	51	50	50	50	50
700	63	62	59	57	56	55	55	54	54	53	53	53	52	51	51	50	50	50	50	50	49	49
710	63	62	59	57	56	55	55	54	54	53	53	53	52	51	51	50	50	50	50	50	49	49
750	63	62	59	57	56	55	55	54	54	53	52	52	52	52	51	50	50	50	50	50	50	49
800	62	60	57	57	56	55	54	54	54	52	52	52	52	51	51	50	50	50	50	50	50	49
900	62	60	57	56	55	55	54	53	53	52	52	51	51	51	50	50	50	50	50	50	50	50
1000	62	60	57	56	56	55	54	53	53	52	52	51	51	51	50	50	50	50	50	50	50	50
1100	62	60	57	56	56	55	54	53	53	52	51	51	51	50	50	50	50	50	50	50	50	50
1250	62	61	58	56	56	54	54	53	53	52	50	50	50	50	50	50	49	49	49	49	49	49
1400	62	61	57	56	56	53	54	53	53	50	50	50	50	50	50	50	49	49	49	49	49	49
1500	62	61	57	56	56	54	54	53	52	50	50	50	50	50	50	50	49	49	49	49	49	49
1600	62	61	57	56	56	54	54	53	52	50	50	50	50	50	50	50	49	49	49	49	49	49

Air velocity 9 m/s
Level of acoustic output [dB]

	B																				
A	**180**	**200**	**225**	**250**	**280**	**300**	**315**	**355**	**400**	**450**	**500**	**550**	**560**	**600**	**630**	**650**	**700**	**710**	**750**	**800**	**900**	**1000**
180	>65	>65	>65	>65	>65	>65	>65	>65	>65	65	64	64	64	64	64	64	64	64	64	63	63	63
200	>65	>65	>65	>65	>65	>65	>65	65	64	64	63	63	63	62	62	62	62	62	62	62	61	61
225	>65	>65	>65	>65	>65	>65	65	63	63	62	61	61	61	61	61	61	61	61	61	61	60	60
250	>65	>65	>65	>65	>65	65	65	63	62	61	60	60	60	60	60	60	60	60	60	60	60	60
280	>65	>65	>65	>65	64	63	62	61	61	60	60	60	60	59	59	59	59	59	59	59	58	58
300	>65	>65	>65	65	63	62	62	61	60	60	60	60	60	60	60	59	59	59	59	59	59	59
315	>65	>65	>65	64	63	62	61	61	60	60	60	60	60	59	59	59	59	59	59	59	59	58
355	>65	>65	>65	64	62	61	60	60	60	60	60	59	59	59	59	58	58	58	58	58	58	58
400	>65	>65	>65	63	61	60	60	59	58	58	58	58	58	58	58	58	58	58	58	57	57	57
450	>65	>65	65	63	60	60	60	59	58	58	58	57	57	57	57	57	57	57	57	56	56	56
500	>65	>65	64	61	60	60	60	59	58	57	57	57	57	57	56	56	56	56	56	56	55	55
550	>65	>65	62	62	60	60	58	57	58	58	57	57	57	56	56	56	56	56	56	56	55	55
560	>65	>65	62	62	60	60	58	57	58	58	57	57	57	56	56	56	56	56	56	56	55	55
600	>65	>65	62	62	60	59	58	58	58	57	56	56	56	56	56	56	55	55	55	55	55	55
630	>65	>65	62	62	60	59	58	58	58	57	56	56	56	56	56	56	55	55	55	55	55	55
650	>65	>65	62	62	59	59	58	58	58	57	56	56	56	56	56	56	55	55	55	55	55	55
700	>65	>65	62	61	59	59	58	58	57	56	55	55	55	55	55	55	55	55	55	55	55	54
710	>65	>65	62	61	59	59	58	58	57	56	55	55	55	55	55	55	55	55	55	55	55	54
750	>65	>65	62	61	59	59	58	57	57	56	55	55	55	55	55	55	55	55	55	55	55	55
800	>65	64	62	61	59	59	58	57	57	56	55	55	55	55	55	55	55	55	55	55	54	54
900	>65	64	62	60	60	59	58	57	57	55	55	55	55	55	55	55	54	55	55	55	54	54
1000	>65	64	60	60	58	58	58	57	57	55	55	55	55	55	55	55	55	55	55	55	54	54
1100	>65	64	60	59	58	58	57	57	57	55	55	55	55	55	55	55	55	55	55	55	54	54
1250	>65	64	60	59	58	58	57	57	56	55	55	55	55	55	54	54	54	54	54	54	54	53
1400	>65	64	61	60	58	58	57	57	56	56	55	55	55	55	55	54	54	54	54	54	53	53
1500	>65	64	60	60	58	58	56	56	56	56	55	55	55	55	55	54	54	54	53	53	53	53
1600	>65	64	60	60	58	58	56	56	56	56	55	55	55	55	55	54	54	54	53	53	53	53

VIII. MATERIAL, FINISHING

- Damper casings and blades are made of fire resistant asbestos free boards made of mineral fibres.
- Fasteners are galvanized.
- Damper bodies and blades can be coated with Promat 2000 anti-moisture coating or Promat-SR anti-aggressive coating. Fasteners are galvanized.

IX. TRANSPORTATION, STORAGE AND WARRANTY

Logistic terms

- Dampers are delivered on pallets. As standard, the dampers are wrapped in plastic foil for protection during transport and must not be used for long-term storage of the equipment . Changes in temperature during transport may cause condensation of water vapour inside the packaging and thereby condisitions may arise inside the packaging that are suitable for corrosion of materials used in the equipment (e.g. white corrosion on zinc-coated items or mould on calcium silicate). Therefore, it is necessary to remove the transport packaging immediately after unloading to allow air to circulate around the product.
- The equipment must be stored in a clean, dry, well ventilated and dust-free environment out of direct sunlight. To ensure protection against moisture and extremes of temperatures (minimum temperature +5°C) the equipment must be protected against mechanical and accidental damage prior to installation.
- Another required packaging system should be approved and agreed by the manufacturer. Packaging material is not returnable in case that another packaging system (material) is required and used and it is not included in the final price of the damper.
- Appropriate handling equipment (e.g. forklifts) must be used for unloading and further handling of the damper due to its weight. Dampers are fragile.
- Dampers are transported by box freight vehicles without direct weather impact, there must not occur any shocks and ambient temperature must not exceed +50°C. Dampers must be protected against impact when transported and manipulated. During transportation, the damper blades must be in the "CLOSED" position.
- Dampers are stored indoors in an environment without any aggressive vapours, gases or dust. Indoor temperature must be in the range from -30°C to +50°C and maximum relative humidity 95% (avoid condensation on the damper body). Dampers must be protected against impact when transported and manipulated.

Warranty

- The manufacturer provides a warranty of 24 months from the date of dispatch for the dampers.
- If a Schischek actuator is used, the actuator is warranted by the manufacturer for 12 months.
- The warranty for fire dampers SEDM, provided by the manufacturer, is completely void if actuating, closing and control devices are unprofessionally handled by untrained workers or if electric components, i.e. actuators.
- The warranty is void if dampers are used for other purposes, devices and working conditions than those allowed by these technical conditions or if the dampers are mechanically damaged during handling.
- If the dampers are damaged by transport, a record must be written down with the forwarder at reception for later complaint.

X. ASSEMBLY, ATTENDANCE AND MAINTENANCE

- Assembly, maintenance and damper function check can be done only by qualified and trained person, i.e. “AUTHORIZED PERSON” according to the manufacturer documentation. All works done on the smoke control dampers must be done according international and local norms and laws.
- All effective safety standards and directives must be observed during damper assembly.
- To ensure reliable smoke exhaust damper function it is necessary to avoid blocking the closing mechanism and contact surfaces with collected dust, fibre and sticky materials and solvents.
- <u>Manual operation</u>
  - Without power supply, the damper can be operated manually and fixed in any required position.

Electrical connection of the actuator in protection box

Protection box without slot or predrilled holes

- Drill two holes into the protection box (from outside to inside) and pull through field wiring cables (CAT 3 fire resistant cables as BS 8519) to connect to the actuator trailing lead inside the housing, using a standard screwed cable connector block, the protection box is made of calcium silicate plates.
- Procedure
  - Use drill (drill size acc. To suit connecting cable Ø + 2 mm for seal up by mastic) and make two holes. It is possible to drill holes in any side of the housing.
  - Pull the heat resistant cable through the calcium silicate plate (wall) and connect with cables from actuator acc. to above mentioned electrical diagram.
  - Seal up the space around cable with fire resistant mastic (HILTI CFS-S ACR, PROMASTOP) or equivalent.
  - Let the mastic harden.

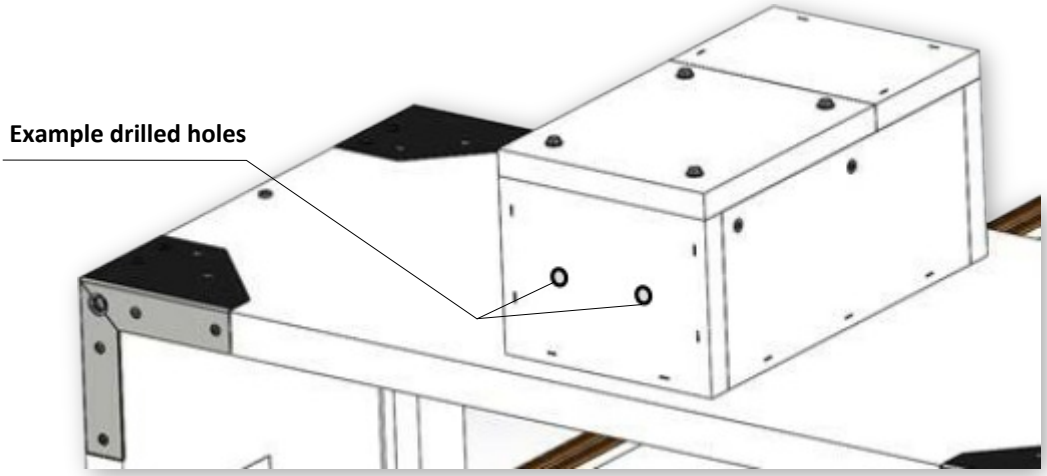

Example of position of holes in the wall of the box, without pre-manufactured slot

Protection box with slot including intumescent tapes – not available for UK

- To connect the actuator, use the prepared hole in the box, which is equipped with intumescent tape.
- If necessary, the hole can be additionally filled with fire-resistant sealant.

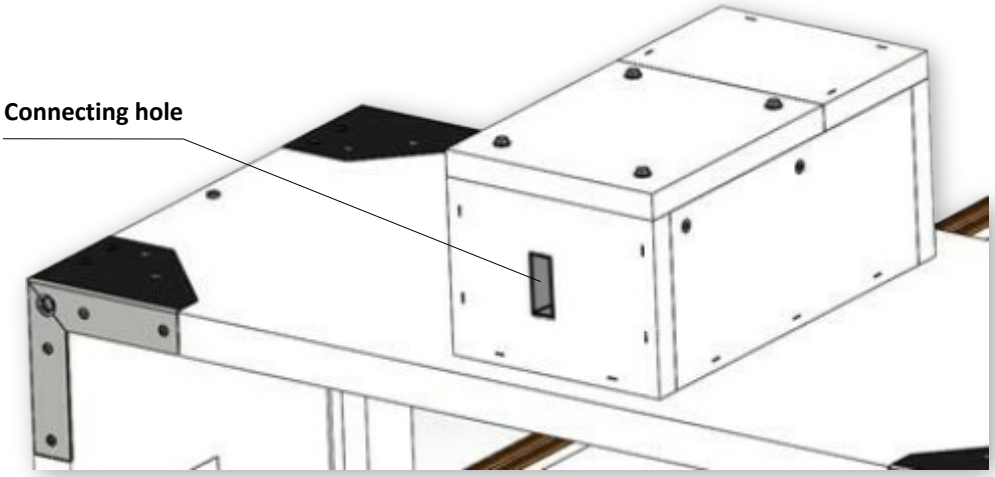

Example of pre-manufactured slot in the insulating box, with intumescent tape inside slot

Entry into service and revisions

- Before entering the dampers into operation after assembly and after sequential revisions, checks and functionality tests of all designs including operation of the electrical components must be successfully provided and finished. After entering into operation, these revisions must be done according to requirement set by national regulations.
- In case that dampers are found unable to serve for their function for any cause, it must be clearly marked. The operator is obliged to ensure that the damper is put into condition in which it is ready for function and meanwhile he is obliged to provide the fire protection by another appropriate way.

- Removing the inspection hole cover
  - Unscrew four of the edge screws to release the cover and then remove it from its original position.

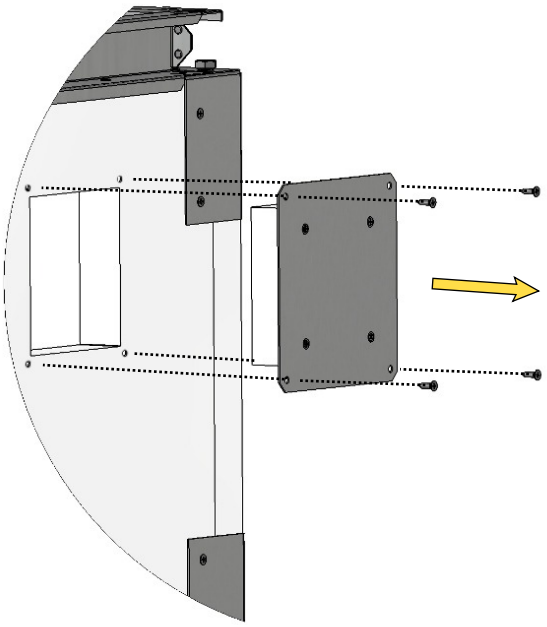

Inspection hole detail

- Results of regular checks, imperfections found and all-important facts connected with the damper function must be recorded in the "FIRE BOOK" and immediately reported to the operator.
- Before entering the dampers into operation after their assembly and by sequential checks, the following checks must be carried out for all designs.
- Visual inspection of proper damper integration, inside damper area, damper blade, contact surfaces and silicon sealing.

- Ensure each damper is fully checked for operational capability, control should be initiated from the control system. Dampers blades should open and close correctly and operation should be visually inspected and documented prior to handover.

XI. ORDERING INFORMATION

Ordering key

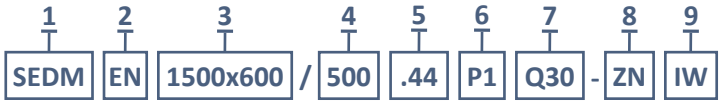

EXAMPLE:
SEDM EN 1500x600/500 .44 P1 Q30-ZN IW
Smoke control damper SEDM, dimension 1500x600 mm, built length 500 mm, control design with actuating mechanism AC 230 V, flange on the blade side, flange dimension 30 mm, galvanized material variant, impregnation against humidity.

1| Type of smoke control damper - SEDM

2| Country of destination

3| Damper dimensions A x B → see pages 11 to 22
„A“ is the width of the damper
„B“ is the height of the damper

4| Built length - 500 mm

5| Damper design

.44	With actuating mechanism BEN, BEE, BE, InMax 50.75-S for 230V
.54	With actuating mechanism BEN, BEE, BE, InMax 50.75-S for 24V
.65 *	With actuating mechanism BEN (BEE)-SR for 24V

** Design .65 is not available by using actuating mechanism BE, InMax 50.75-S*

6| Accessories

	Without flanges
P	With flanges on both sides
P1	Flange on the blade side → see page 10
P2	Flange on the actuating mechanism side → see page 10

7| Flange dimension

Q30	Flange width 30 mm

8| Material

ZN	Galvanized

9| Surface treatment

	Without surface treatment
IW	Damper blade impregnation, impregnating agent PROMAT 2000 - impregnation against humidity
IA	Damper blade impregnation, impregnating agent PROMAT SR - impregnation against chemical

Accessories

Flange

1	2	3	4
FLANGE	P1	SEDM	1500x600

1| Accessory type - flange

3| Type of smoke control damper - SEDM

4| Damper dimensions A x B → see pages 11 to 22

2| Flange design

P	With flanges on both sides
P1	Flange on the blade side → see page 10
P2	Flange on the actuating mechanism side → see page 10

Installation holder

1	2
INSTALLATION HOLDER	L = 500

1| Accessory type - installation holder

2| Installation holder design

L = 500	Length 500 mm
L = 250	Length 250 mm

Data label

- Data label is placed on the damper casing (example)

The producer reserves the right for innovations of the product.
For actual product information see www.mandik.com

MANDÍK®

www.mandik.com

MANDÍK, a.s. • Dobříšská 550 • 267 24 Hostomice • Czech Republic • Tel.: +420 311 706 742 • E-Mail: mandik@mandik.cz