MANDÍK

TPM 149/21
Version 2026-09-29

FDMQ 180

Fire damper

Technical Documentation
Installation, Commissioning, Operation, Maintance and Service Manual

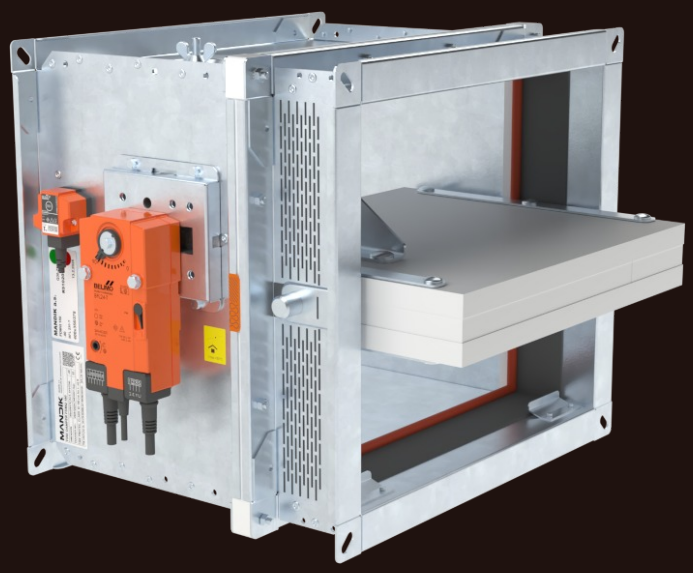

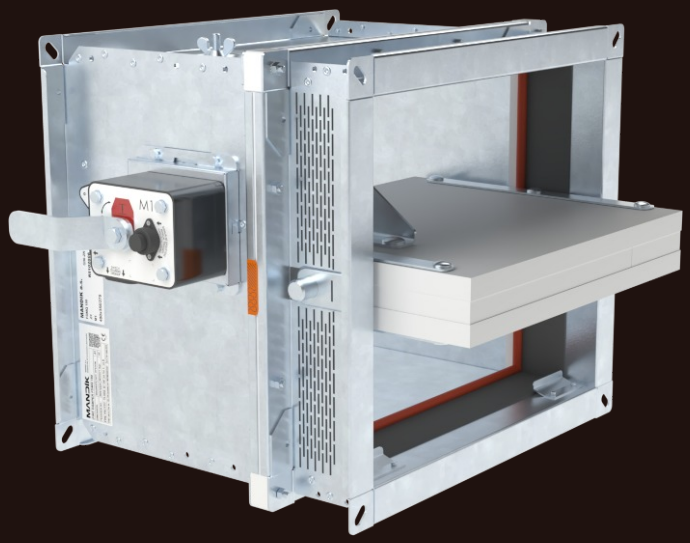

CE
1391

MANDÍK®
www.mandik.com

MANDÍK, a.s. • Dobříšská 550 • 267 24 Hostomice • Czech Republic • Tel.: +420 311 706 742 • E-Mail: mandik@mandik.cz

These technical specifications state a row of manufactured sizes and models of fire dampers FDMQ 180
It is valid for production, designing, ordering, delivery, maintenance and operation.

CONTENT

I. GENERAL....3
Description....3
II. DESIGN....4
Design with manual control....4
Design with spring return actuator....6
Design with the communication and supply device....12
III. DIMENSIONS....14
Technical parameters....16
IV. INSTALLATION....21
Placement and installation....21
Statement of installations....22
Installation in solid wall construction....23
Installation in solid ceiling construction....24
V. SUSPENSION SYSTEMS....25
Example of duct connection....28
VI. TECHNICAL DATA....29
Pressure loss....29
Noise data....31
VII. MATERIAL, FINISHING....32
VIII. TRANSPORTATION, STORAGE AND WARRANTY....33
Logistic terms....33
Warranty....33
IX. ASSEMBLY, ATTENDANCE AND MAINTENANCE....34
Commissioning and revisions....36
X. ORDERING INFORMATIONS....38
Ordering key....38
Data label....39

I. GENERAL

Description

Fire dampers are shutters in ducts of air-conditioning devices that prevent the spread of fire and combustion products from one fire segment to the other one by means of closing the duct in the points of fire separating constructions.

Damper blade automatically closes air duct using a closing spring or a spring return actuator. The closing spring is actuated by pressing a button on the manual control or by melting a fusible link.

The return spring of the actuator is actuated when a thermoelectric activation device BAT is activated, when a test button on BAT is pressed or when power supply of the actuator is interrupted.

After closing the blade, the damper is sealed with silicon against smoke penetration. On request by customer, the damper can be supplied silicon-free. In the closed position, the damper is also sealed with material which increases its volume due to increasing temperature and air proofs the air duct.

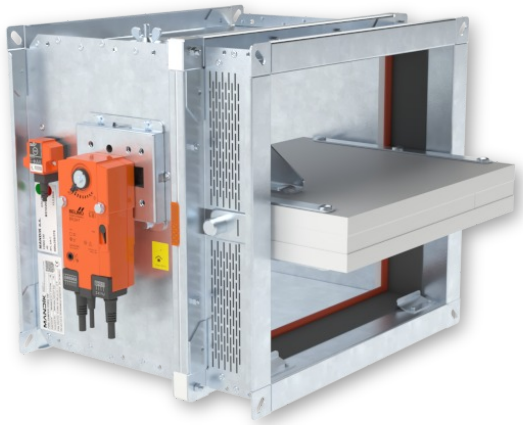

FDMQ 180 with spring return actuator

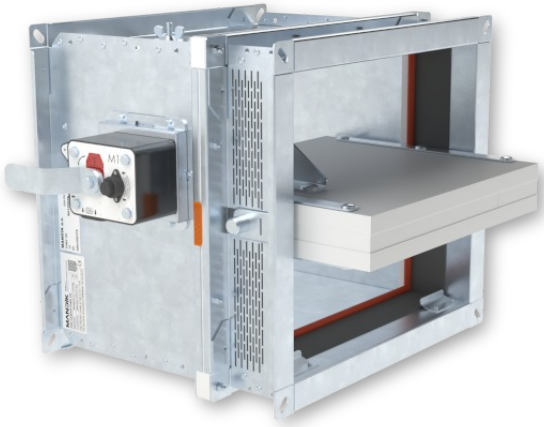

FDMQ 180 with manual control

Damper characteristics

- CE certified acc. to EN 15650
- Tested in accordance with EN 1366-2
- Classified acc. to EN 13501-3+A1
- External Casing leakage class ATC 3 (old marking “C“), Internal leakage class 3 acc. to EN 1751
- Cycling test in class C_{10000} acc. to EN 15650
- Corrosion resistant acc. to EN 15650
- Certificate of constancy of performance No. 1391-CPR-XXXX/XXXX
- Declaration of Perfomance No. PM/FDMQ 180/01/XX/X
- Hygienic assessment of fire dampers - Report No. 1.6/pos/19/19b

Working conditions

- Exact damper function is provided under the following conditions:
  - maximum air velocity 12 m/s
  - maximum pressure difference 1200 Pa
  - the air circulation in the whole damper section must be secured steady over the entire surface.
- Dampers can be installed in arbitrary position
- Dampers are suitable for systems without abrasive, chemical and adhesive particles.
- Dampers are designed for macroclimatic areas with mild climate according to EN IEC 60 721-3-3 ed.2., class 3K22. (Environment 3K22 is typically protected place with regulated temperature)
- Temperature in the place of installation is permitted to range from -30°C to +50°C.

II. DESIGN

Design with manual control

Design .01

- Design with manual control with a fusible link which actuates the shutting device, after the nominal activation temperature 72°C has been reached.
- Automatic initiation of the manual control is not activated if the temperature does not exceed 70°C.
- In case that other activation temperatures are required, fusible links with nominal activation temperature +104°C or +147°C can be supplied (this requirement must be specified in the order).

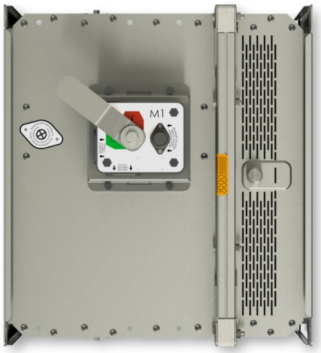

Design .01

ATTENTION:

- Manual controls are produced in four sizes M2 to M5, difference is only in size of a closing spring, which closes the fire damper.
- For the size of fire dampers is always assigned the size of the manual control → see pages 16 to 20
- It is not recommended to use different size of the manual control than given by the manufacturer, otherwise there is a risk of damaging the fire damper.

Design .11

- Design .01 with manual control can be complemented with a limit switch signaling of the damper blade position "CLOSED".
- Cable is connected directly to limit switch.
- Limit switch detail → see page 5

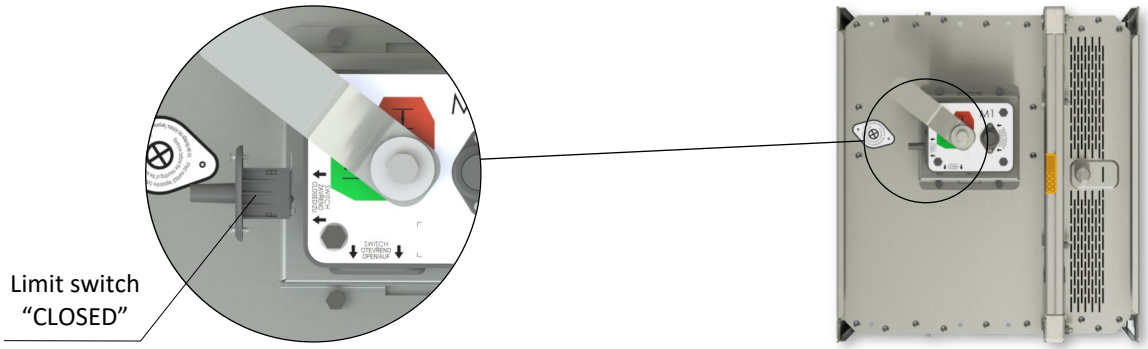

Design .11

Design .80

- Design .01 with manual control can be complemented with two limit switches signaling of the damper blade position "CLOSED" and "OPEN".
- Cables are connected directly to limit switches.
- Limit switch detail → see page 5

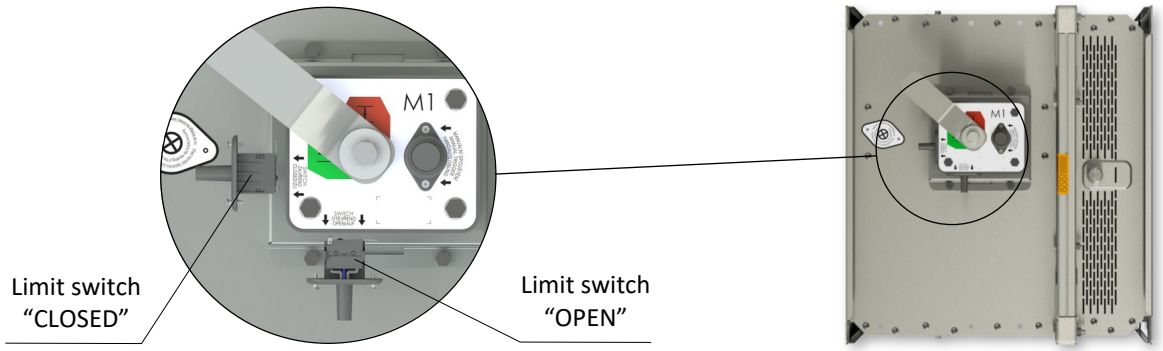

Design .80

Manual control

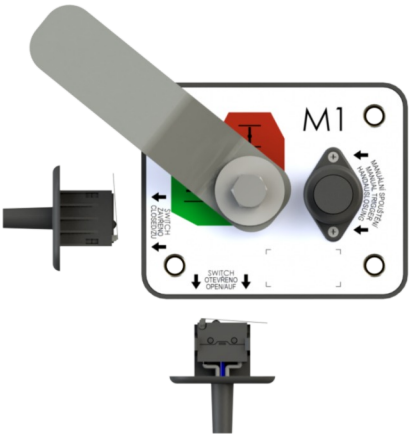

Fusible link replacement:*

1. The mechanism (damper) must be in the closed position (indicated by the red area on the sticker).
2. Press the Close button.
3. Using adjustable pliers, squeeze the fusible link clips together.
4. Pull the fusible link out of the clips.
5. Using adjustable pliers, squeeze the fusible link clips together again.
6. Insert the new fusible link into the clips.

Function check:**

7. Open the mechanism (damper) by moving the lever to the Open position (indicated by the green area on the sticker).
8. Press the Close button and check that the mechanism closes correctly. Repeat steps 7 and 8 at least 3 times.

* The mechanism can be removed for change of the fusible link.
** Caution: Risk of injury from moving parts.

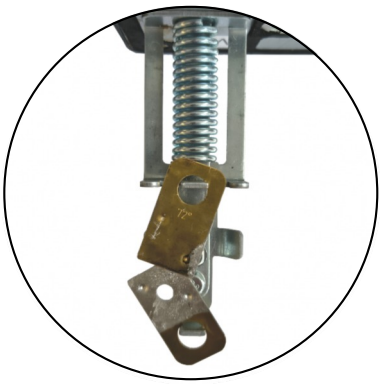

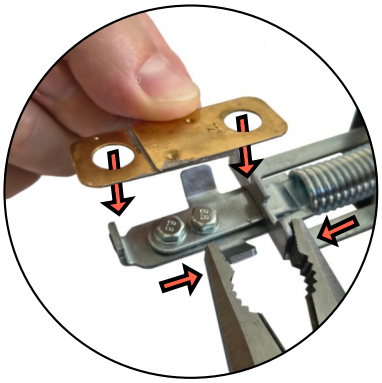

Limit switch G905-300E03W1

<u>This limit switch is possible to connect in two following ways</u>

- CUT-OFF if the arm is moving … connect wire 1+2
- SWITCH-ON if the arm is moving … connect wire 1+4

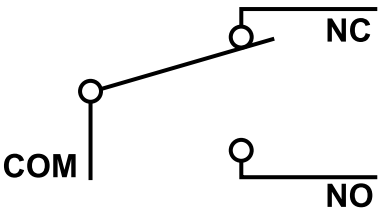

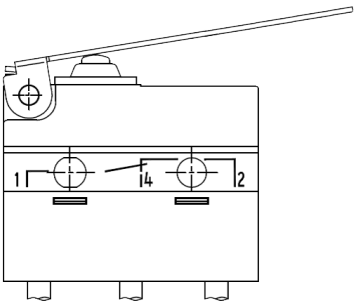

Nominal voltage and maximal current	AC 230V / 5A
Class of protection	IP 67
Working temperature	-25°C … +120°C

1(COM) - black wire
2(NC) - gray wire
4(NO) - blue wire

Design with spring return actuator

Design .40 and .50

- The fire dampers are equipped with Belimo spring return actuators with thermoelectric activation device BAT. The spring return actuator types are BFL, BFN or BF depending on the damper size. (Further mentioned as „actuator“).
- After being connected to power supply 230V or AC/DC 24V, the actuator rotates the damper blade to the operating position "OPEN" and at the same time pre-stretches its return spring.
- When the actuator is power supplied, the damper blade is in the position "OPEN" and the return spring is pre-stretched.
- Time needed for full opening of the damper blade from the position "CLOSED" to the position "OPEN" is maximum 120 sec. If the actuator power supply is interrupted (due to loss of supply voltage, or pressing a test button on the thermoelectric activation device BAT), the actuator rotates the damper blade to the breakdown position "CLOSED".
- The time of closing the damper blade from the position "OPEN" to the position "CLOSED" takes maximum 20 sec.
- In case that the power supply is restored again (the blade can be in any position), the actuator starts to rotate the damper blade back to the position "OPEN".
- A thermoelectric activation device BAT, which contains two fusible links Tf1 and Tf2, is an integral part of the actuator.
- These fuses are activated when temperature +72°C has been reached (the fuse Tf1 due to temperature outside the duct and the fuse Tf2 due to temperature inside the duct). The thermoelectric activation device can also be equipped with a Tf2 fusible link type ZBAT 95/120/140 (must be specified in the order). In this case, the activation temperature inside the duct is +95°C, +120°C or +140°C (depending on the type).
- After the fusible link Tf1 or Tf2 has been activated, the power supply is permanently and irreversibly interrupted and the actuator, by means of the pre-stretched spring, rotates the damper blade into the breakdown position "CLOSED".
- Signalisation of damper blade position "OPEN" and "CLOSE" is provided by two microswitches.

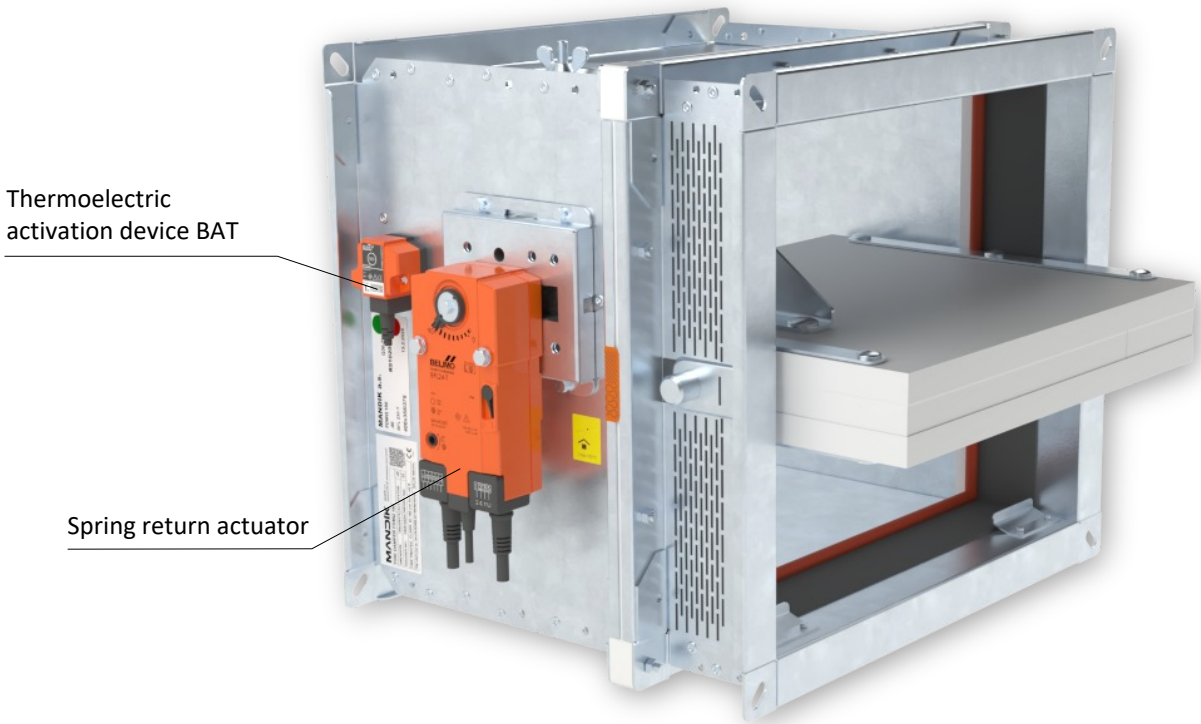

Design .40 and .50

Actuator BELIMO BFL 230-T

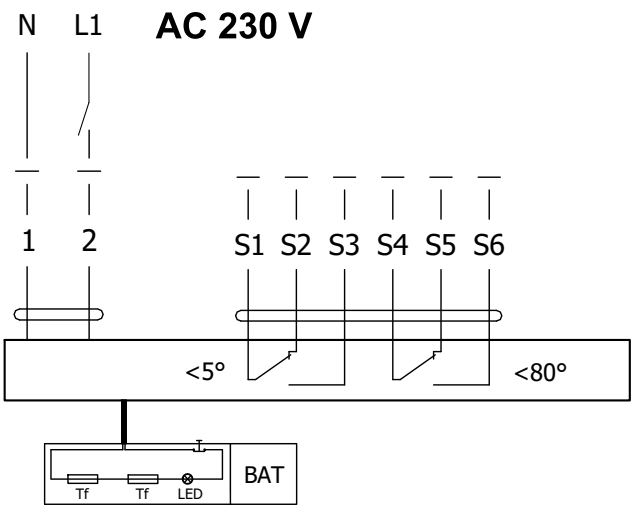

Actuator BELIMO BFL 24-T(-ST)

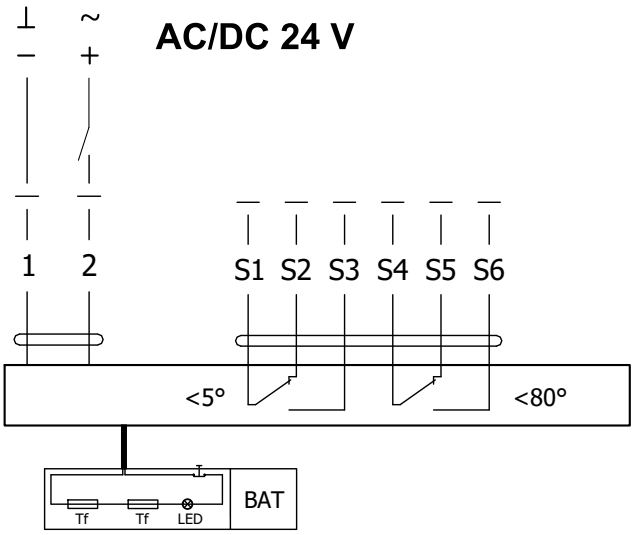

Actuator BELIMO BFL 230-T(-ST), BFL 24-T(-ST)		
Actuator BELIMO - 4 Nm/ 3 Nm Spring	**BFL 230-T(-ST)**	**BFL 24-T(-ST)**
Power voltage	AC 230 V 50/60Hz	AC/DC 24 V 50/60Hz
Power consumption - in operation - in rest position	2,6 W 0,7 W	2,0 W 0,7 W
Dimensioning	4 VA (Imax 4 A @ 5 ms)	2,8 VA (Imax 2,9 A @ 5 ms)
Protection class	II	III
Degree of protection	IP 54	
Running time - motor - spring return	< 60 s ~ 20 s	
Ambient temperature - normal duty - safety duty - non-operating temperature	 -30°C … +55°C The safe position will be attained up to max. +75°C -40°C … +55°C	
Connection - supply/control - auxiliary switch	cable 1 m, 2 x 0,75 mm² (BFL 2xx-T-ST) with 3-pin plug-in connectors cable 1 m, 6 x 0,75 mm² (BFL 2xx-T-ST) with 6-pin plug-in connectors	
Response temperature fusible link	duct outside temperature +72°C duct inside temperature +72°C	

Actuator BELIMO BFN 230-T

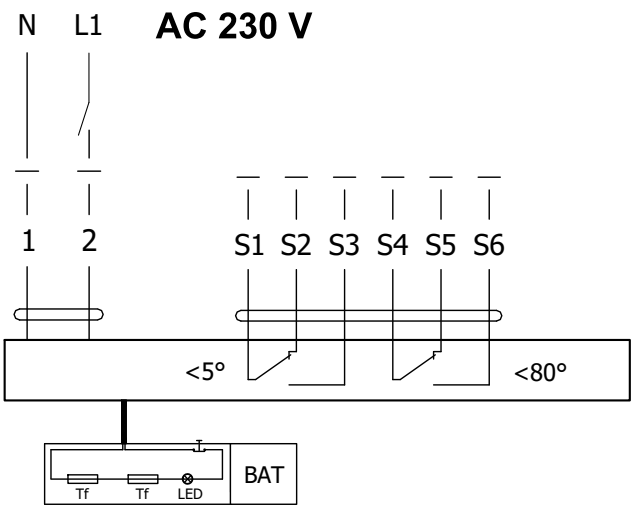

Actuator BELIMO BFN 24-T(-ST)

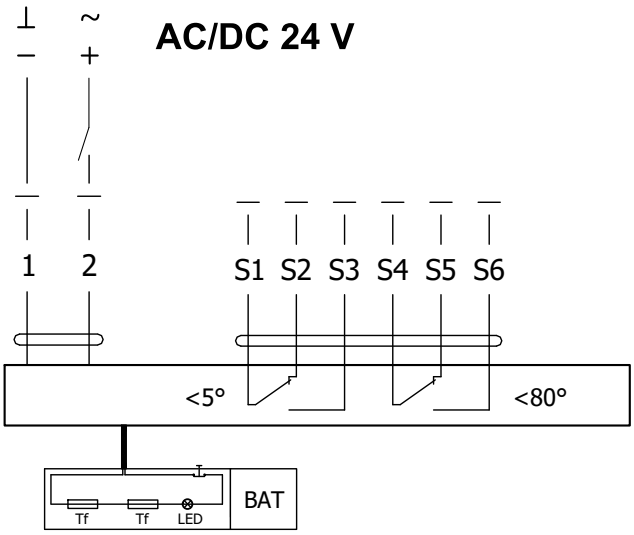

Actuator BELIMO BFN 230-T(-ST), BFN 24-T(-ST)		
Actuator BELIMO - 9 Nm/ 7 Nm Spring	**BFN 230-T(-ST)**	**BFN 24-T(-ST)**
Power voltage	AC 230 V 50/60Hz	AC/DC 24 V 50/60Hz
Power consumption - in operation - in rest position	3,5 W 1,3 W	3,2 W 1,2 W
Dimensioning	6,5 (Imax 4 A @ 5 ms)	4,3 VA (Imax 2,9 A @ 5 ms)
Protection class	II	III
Degree of protection	IP 54	
Running time - motor - spring return	< 60 s ~ 20 s	
Ambient temperature - normal duty - safety duty - non-operating temperature	 -30°C … +55°C The safe position will be attained up to max. +75°C -40°C … +55°C	
Connection - supply/control - auxiliary switch	cable 1 m, 2 x 0,75 mm² (BFN 2xx-T-ST) with 3-pin plug-in connectors cable 1 m, 6 x 0,75 mm² (BFN 2xx-T-ST) with 6-pin plug-in connectors	
Response temperature fusible link	duct outside temperature +72°C duct inside temperature +72°C	

Actuator BELIMO BF 230-TN

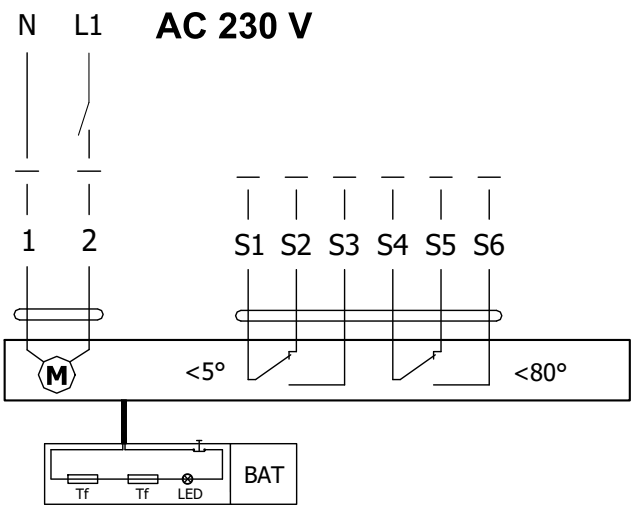

Actuator BELIMO BF 24-TN (-ST)

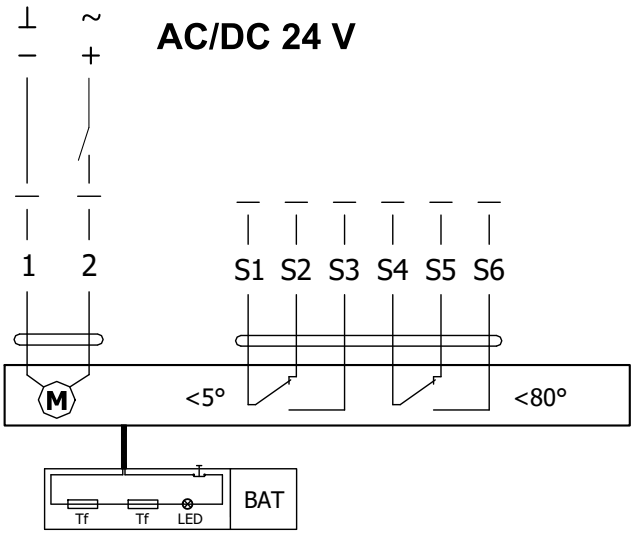

Actuator BELIMO BF 230-TN(-ST), BF 24-TN(-ST)		
Actuator BELIMO - 18 Nm/ 12 Nm Spring	**BF 230-TN(-ST)**	**BF 24-TN(-ST)**
Power voltage	AC 230 V 50/60Hz	AC/DC 24 V 50/60Hz
Power consumption - in operation - in rest position	8,5 W 3 W	7 W 2 W
Dimensioning	11 VA (Imax 8,3 A @ 5 ms)	10 VA (Imax 8,3 A @ 5 ms)
Protection class	II	III
Degree of protection	IP 54	
Running time - motor - spring return	120 s ~ 16 s	
Ambient temperature - normal duty - safety duty - non-operating temperature	 -30°C … +50°C The safe position will be attained up to max. +75°C -40°C … +50°C	
Connection - supply/control - auxiliary switch	cable 1 m, 2 x 0,75 mm² (BF 2xx-TN-ST) with 3-pin plug-in connectors cable 1 m, 6 x 0,75 mm² (BF 2xx-TN-ST) with 6-pin plug-in connectors	
Response temperature fusible link	duct outside temperature +72°C duct inside temperature +72°C	

Thermoelectric activation device BAT

- If the fusible link Tf1 is interrupted (due to temperature outside the duct), it is necessary to replace the spring return actuator. Thermoelectric activation device BAT is integral part of the actuator.
- If the fusible link Tf2 is interrupted (due to temperature inside the duct), only the spare part ZBAT 72 (95/120/140) needs to be replaced (acc.to the activation temperature).
- When one of the fusible links responds, the supply voltage is interrupted permanently and irreversibly.
- The function (interruption of the supply voltage) can be checked by pressing the test button.
- Installation is carried out with the pre-assembled, self-tapping screws.

BELIMO ZBAT 72
Black (BK) = 72°C (standard)

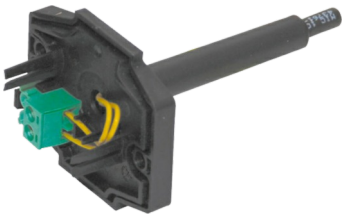

BELIMO ZBAT 95
Grey (GY) = 95°C

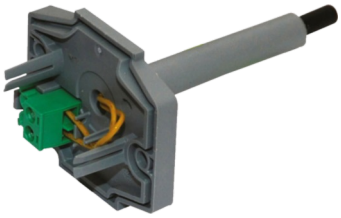

BELIMO ZBAT 120
Orange (OG) = 120°C

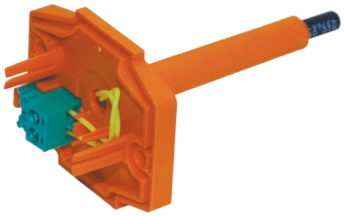

BELIMO ZBAT 140
Red (RD) = 140°C

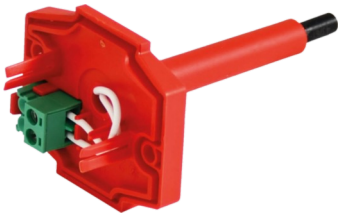

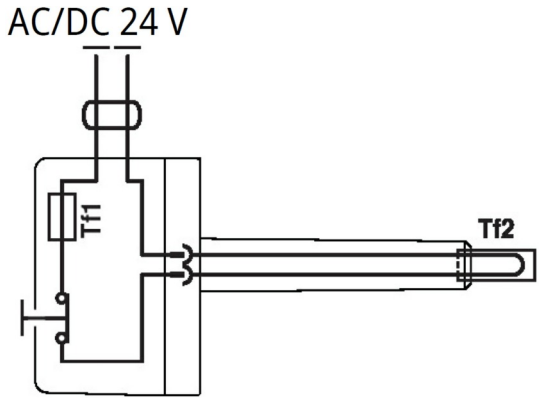

Thermoelectric activation device BAT 72 (95/120/140)	
Power voltage	AC/DC 24 V 50/60Hz
Rated current	1 A
AC/DC throughput resistance	<1 Ω
Protection class	III
Degree of protection	IP 54
Probe length	65 mm
Ambient temperature Storage temperature Ambient humidity	-30°C … +50°C -40°C … +50°C Max. 95% RH, non-condensing
Connection supply	Cable 1 m, 2 x 0.5 mm², Betaflam cable heatresistant up to 145°C
Response temperature fusible link	Duct inside temperature +72 (95/120/140)°C Duct outside temperature +72 (95/120/140)°C

Design .41 and .51

- Design .41 or .51 with actuator and smoke detector ORS 142 K. The voltage can be AC 230 V or 24 V DC. Design .41 with voltage AC 230 V is equipped with communication and supply device BKN 230-24-MOD and with actuator BF 24-TN (BFL 24-T, BFN 24-T).
- The smoke detector is activated when smoke spreads in air duct system. Deactivation of the smoke detector alarm status is provided by interruption of supply voltage for min. 2s.
- Signalisation of damper blade position "OPEN" and "CLOSE" is provided by two microswitches.

Design .41 with actuator BF 24-TN (BFL, BFN 24-T), with smoke detector ORS 142 K and with supply device BKN 230-24-MOD (voltage AC 230 V)

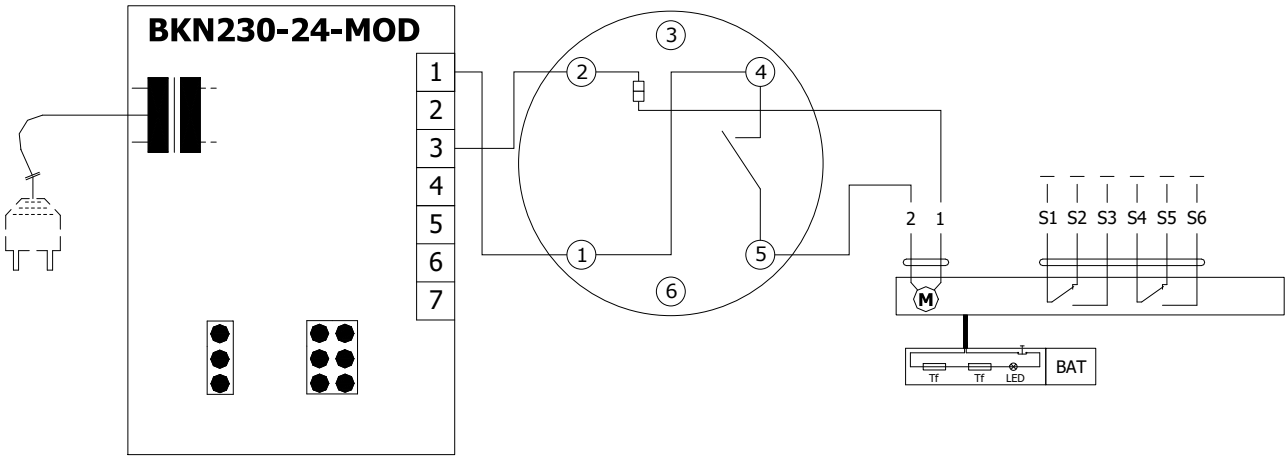

Design .51 with actuator BF 24-TN (BFL, BFN 24-T), with smoke detector ORS 142 K (voltage 24 V DC)

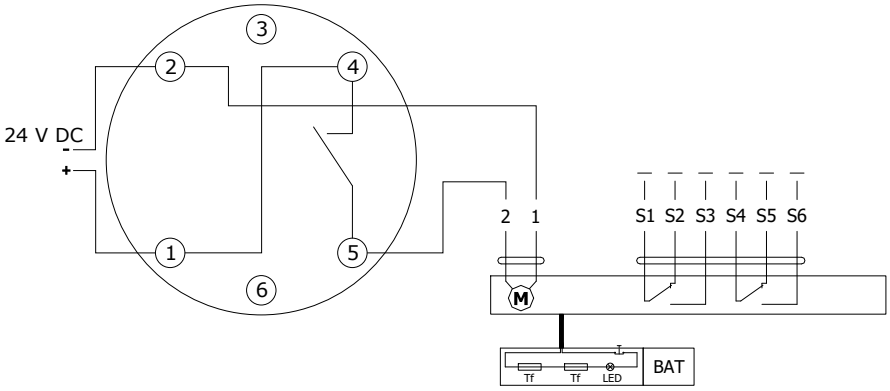

Communication and supply device BKN 230-24-MOD	
Nominal voltage	AC 230 V 50/60Hz
Power consumption	3 W (operating position)
Dimensioning	14 VA (including actuator)
Protection Class	II
Degree of protection	IP 40
Ambient temperature Non-operating temperature	-20°C … +50°C -40°C … +80°C
Connection - net - motor - terminal board	cable 0,9 m with EURO plug type 26 6-pole connector, 3-pole connector screw terminals for cable 2x1,5 mm²

Design with the communication and supply device

Design .63, 63S

- Design with the communication and supply device BKN 230-24-MOD and actuator BF 24-TN-ST (BFL 24-T-ST, BFN 24-T-ST) for communication with control systems using the Modbus RTU or BACnet MS / TP. Design 63. can be extended with an optical smoke detector ORS 142 K (design .63S).
- The wiring of the line is to be carried out in accordance with applicable RS485 regulations.
- Parameterization of the communication is done using DIL switches.
- BKN 230-24-MOD can be installed separately, without a connection to a master control system, in which case the connection bridge between the terminals 1 and 4 must be installed.
- If the test button on BAT is pressed or if the power supply (e.g. by a signal from ELECTRICAL FIRE SIGNALISATION) is disconnected, the damper blade position will be "FAILURE".
- For design .63S the smoke detector is activated when smoke spreads in air duct system. Deactivation of the smoke detector alarm status is provided by interruption of supply voltage for min. 2s.

Design with communication and supply device BKN 230-24-MOD, with actuator BF 24-TN-ST (BFL 24-T-ST, BFN 24-T-ST) and smoke detector ORS 142 K

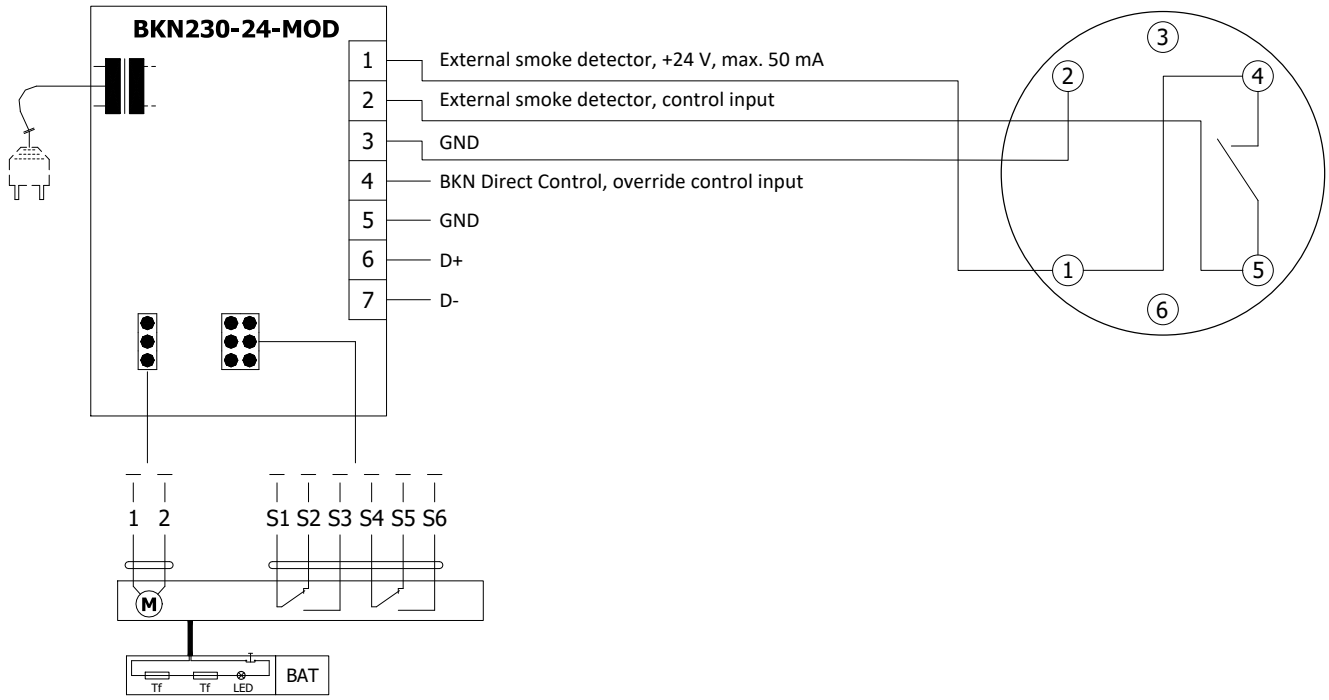

Communication and supply device BKN 230-24-MOD	
Nominal voltage	AC 230 V 50/60Hz
Power consumption	3 W (operating position)
Dimensioning	14 VA (including actuator)
Protection Class	II
Degree of protection	IP 40
Ambient temperature Non-operating temperature	-20°C ... +50°C -40°C ... +80°C
Connection - net - motor - terminal board	cable 0,9 m with EURO plug type 26 6-pole connector, 3-pole connector screw terminals for cable 2x1,5 mm²

Optical smoke detector ORS 142 K with the socket 143A

- The smoke detector ORS 142 K is used for early smoke detection in rooms or inside the ventilation system.
- The sensor operates on the light scatter principle. Inside the scanning chamber is a light source and a light sensor, in the normal state the light from the source does not fall on the senzor. Only when smoke enters the scanning chamber the light is scattered and falls on the senzor.
- The smoke detector can be connected directly to the actuator (design .41 and .51) which, in case of smoke detection, passes to the safety position, or to the BKN communication and supply device (design .63).
- By early detection of smoke, it can be effectively prevented from spreading of smoke through the ventilation system. In addition to smoke detection, the sensor can distinguish and signal slight and heavy contamination, e.g. the presence of large amounts of dust.
- The ORS 142 K smoke detector has an alarm memory, i.e. if the alarm is triggered, the safety relay opens and stays in this state even if the smoke disappears from the scanning chamber. The sensor remains in the alarm state until the power supply is briefly reset.
- On the pin 3, an external device can be connected via RS-Bus communication to report the status of the sensor.
- Pin 6 has no connection to the detector and is designed as a load-bearing structure in the base.

ORS 142 K

Socket 143A

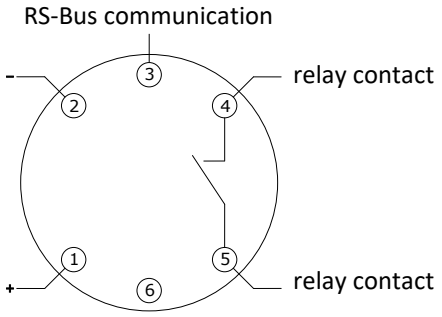

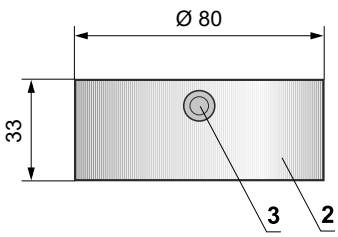

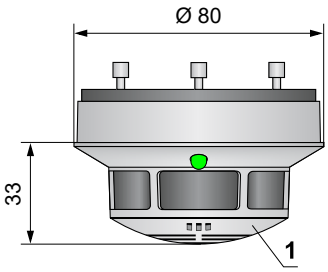

Relay contact		LED	
In operation	4 5	Green	Shines
Slight contamination		Green / Yellow	Flashes
Heavy contamination		Green / Yellow	Flashes
Fault	4 5	Yellow	Shines
Alarm		Red	Shines
Power Off		Off	–

1 ORS 142 K
2 Socket 143A
3 Side cable entries Ø 9mm
4 Rear cable entries Ø 9mm
5 Fixing hole Ø 4,5 mm
6 Fixing hole Ø 3,7 mm

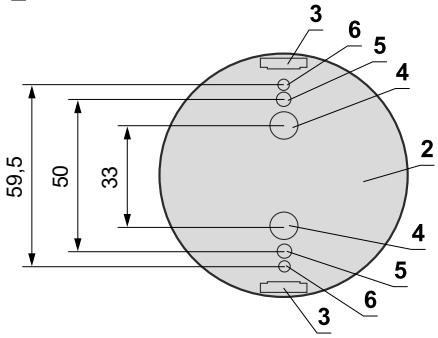

Optical smoke detector ORS 142 K with the socket 143A	
Operating voltage	18 … 28 V DC
Residual ripple	≤ 200 mV
Power Consumption Socket (without actuator)	max. 22 mA
Degree of protection	IP 42
Ambient temperature	-20°C … +75°C
Aditional temperature senzor	+70°C
Connection - net - motor - communication and supply device BKN	Cabel 1m, connected to terminals 1, 2 and 4 Actuator connected on the terminals 2 and 5 Cabel 1m, connected to terminals 1, 2, 4 and 5

III. DIMENSIONS

FDMQ 180 with manual control

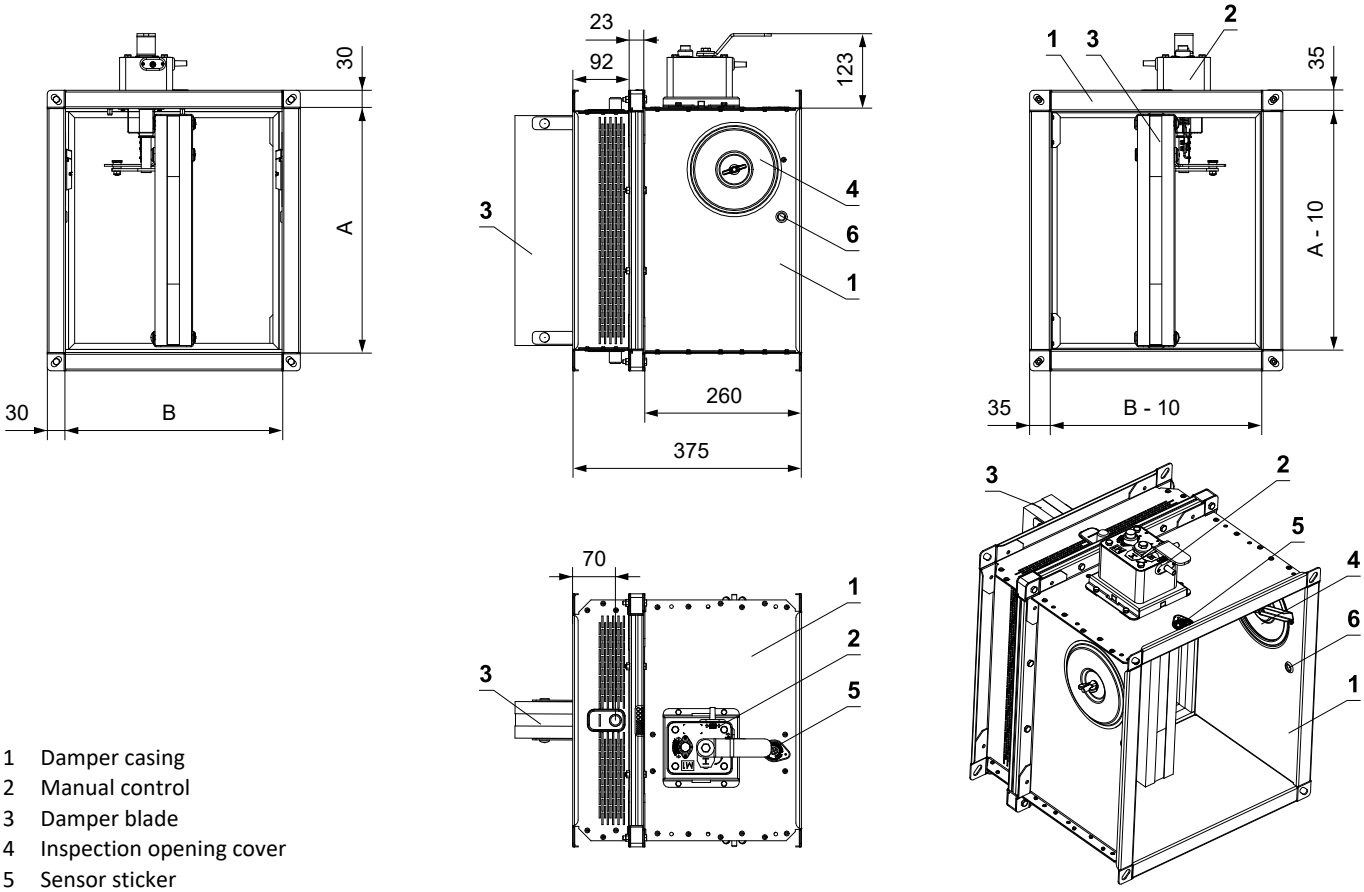

1 Damper casing
2 Manual control
3 Damper blade
4 Inspection opening cover
5 Sensor sticker
6 Hole for camera

FDMQ 180 with spring return actuator

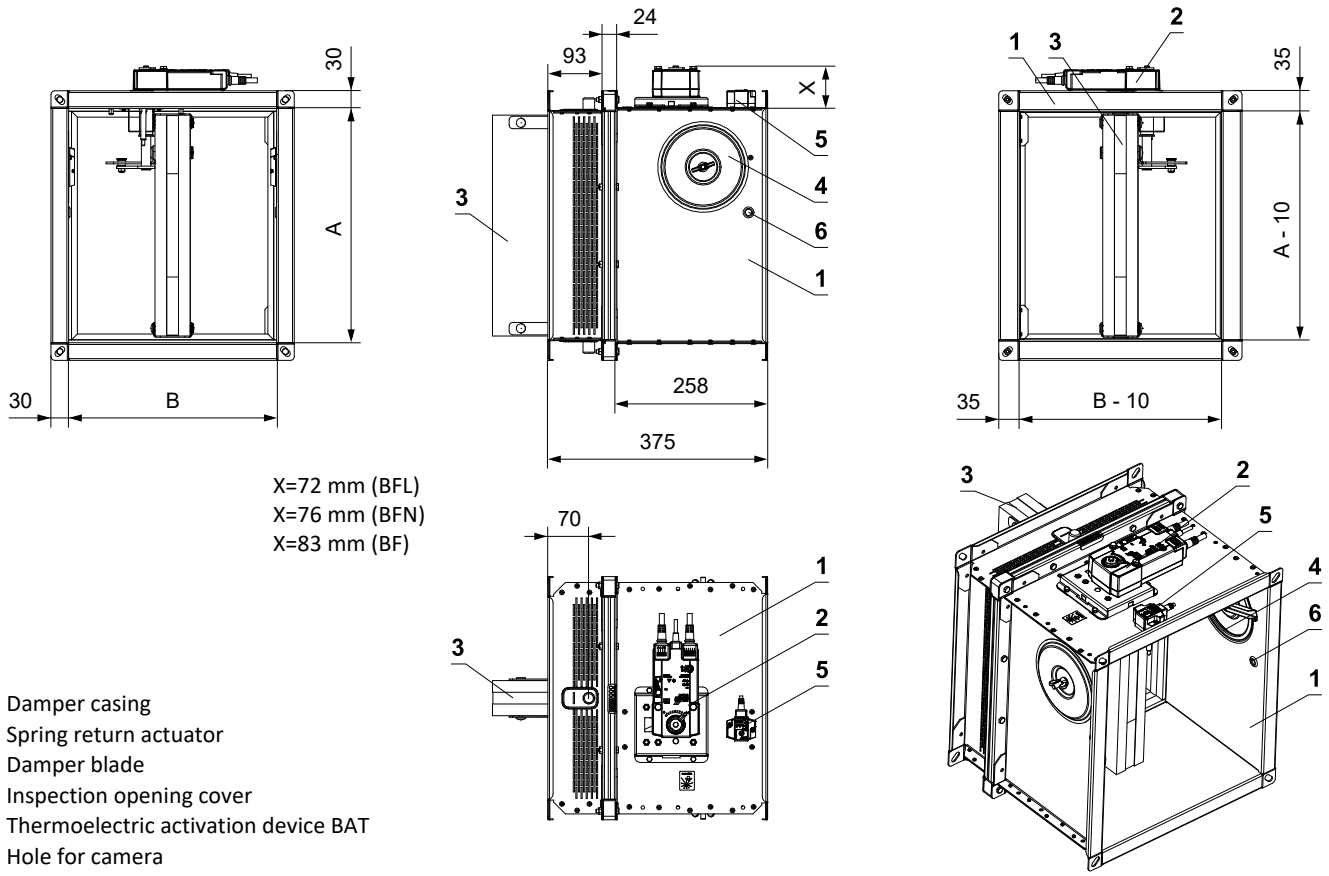

X=72 mm (BFL)
X=76 mm (BFN)
X=83 mm (BF)

1 Damper casing
2 Spring return actuator
3 Damper blade
4 Inspection opening cover
5 Thermoelectric activation device BAT
6 Hole for camera

Damper blade overlaps

- Open damper blade overlaps the damper casing by the value “a” or “c”. These values are specified in chapter Technical parameters → see pages 16 to 20

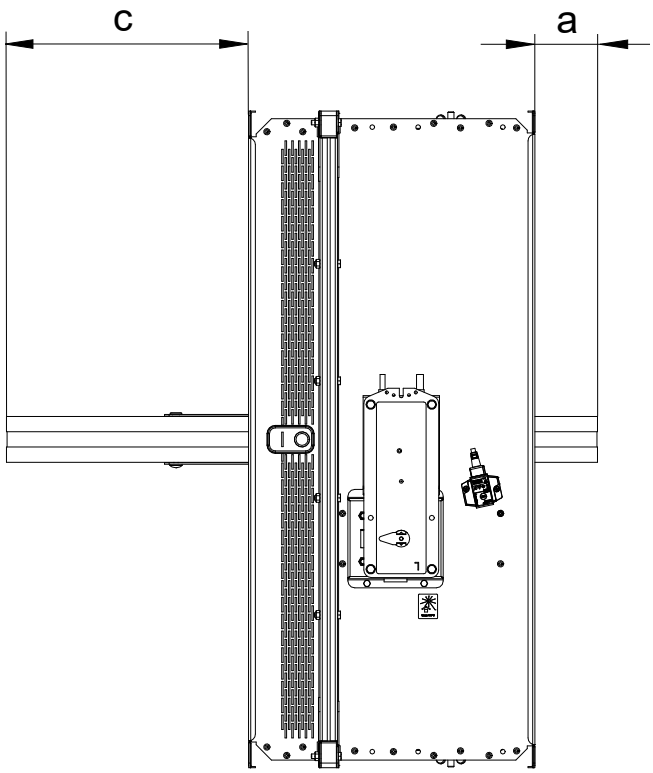

Values "a" and "c" must be respected when projecting following air-conditioning duct.

Flange of a damper - CONTROL SIDE

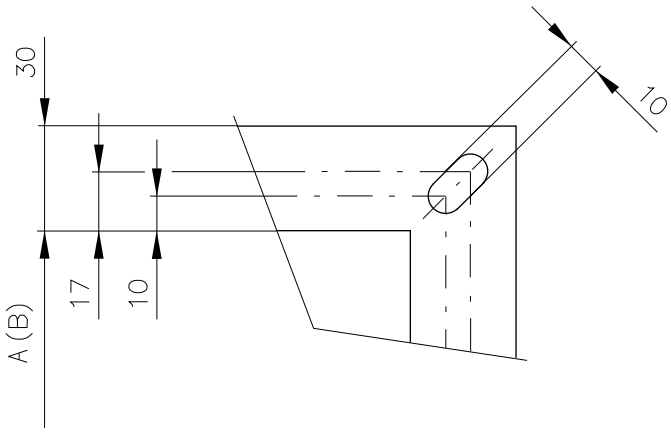

Flange of a damper - INSTALLATION SIDE

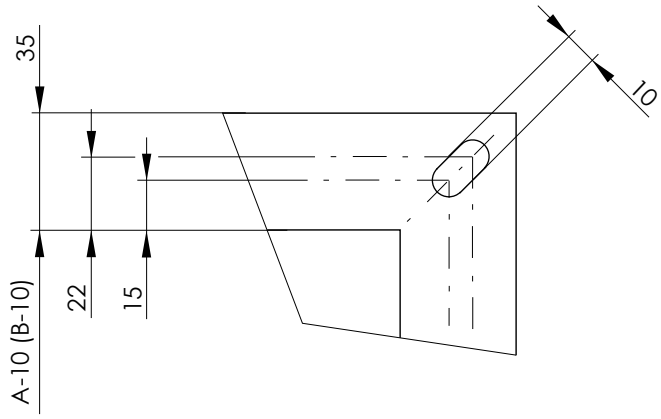

Flanges of dampers are 30 mm wide with oval hole.

Technical parameters

A x B [mm]		Damper blades overlaps a [mm]	Damper blades overlaps c [mm]	Weight Man. [kg]	Weight Actu. [kg]*	Free area S_f [m²]	Spring return actuator	Manual control
200 x	200	-	17	10,8	10,9	0,0201	BFL	M2
	225	-	29	11,5	11,6	0,0245		
	250	-	42	12,0	12,1	0,0289		
	280	-	57	12,7	12,8	0,0341		
	300	-	67	13,3	13,4	0,0376		
	315	-	74	13,7	13,8	0,0403		
	355	-	94	14,8	14,9	0,0473		
	400	-	117	15,8	15,9	0,0551		
	450	-	142	17,0	17,1	0,0639		
	500	-	167	18,1	18,2	0,0726		
	550	-	192	18,9	19,0	0,0814		
	560	-	197	19,1	19,2	0,0831		
	600	-	217	20,0	20,1	0,0901		
	630	-	232	20,7	20,8	0,0954		
	650	7	242	21,1	21,2	0,0989		
	700	32	267	22,3	22,7	0,1076	BFN	
	710	37	272	22,5	22,9	0,1094		
	750	57	292	23,4	23,8	0,1164		
	800	82	317	24,5	24,9	0,1251		
225 x	200	-	17	11,3	11,4	0,0230	BFL	M2
	225	-	29	12,1	12,2	0,0280		
	250	-	42	12,7	12,8	0,0330		
	280	-	57	13,4	13,5	0,0390		
	300	-	67	14,1	14,2	0,0430		
	315	-	74	14,4	14,5	0,0460		
	355	-	94	15,6	15,7	0,0540		
	400	-	117	16,7	16,8	0,0630		
	450	-	142	17,9	18,0	0,0730		
	500	-	167	19,1	19,2	0,0830		
	550	-	192	20,0	20,1	0,0930		
	560	-	197	20,2	20,3	0,0950		
	600	-	217	21,2	21,6	0,1030		
	630	-	232	21,9	22,3	0,1090	BFN	
	650	7	242	22,4	22,8	0,1130		
	700	32	267	23,6	24,0	0,1230		
	710	37	272	23,8	24,2	0,1250		
	750	57	292	24,8	25,2	0,1330		
	800	82	317	26,0	26,4	0,1430		
250 x	200	-	17	11,9	12,0	0,0259	BFL	M2
	225	-	29	12,7	12,8	0,0315		
	250	-	42	13,3	13,4	0,0371		
	280	-	57	14,1	14,2	0,0439		
	300	-	67	14,8	14,9	0,0484		
	315	-	74	15,1	15,2	0,0518		
	355	-	94	16,4	16,5	0,0608		
	400	-	117	17,5	17,6	0,0709		
	450	-	142	18,8	18,9	0,0821		
	500	-	167	20,1	20,2	0,0934		
	550	-	192	21,0	21,1	0,1046		
	560	-	197	21,3	21,4	0,1069		
	600	-	217	22,3	22,7	0,1159	BFN	
	630	-	232	23,1	23,5	0,1226		
	650	7	242	23,6	24,0	0,1271		
250 x	700	32	267	24,9	25,3	0,1384	BFN	M2
	710	37	272	25,1	25,5	0,1406		
	750	57	292	26,1	26,5	0,1496		M3
	800	82	317	27,4	27,8	0,1609		
280 x	200	-	17	12,6	12,7	0,0293	BFL	M2
	225	-	29	13,4	13,5	0,0357		
	250	-	42	14,1	14,2	0,0421		
	280	-	57	14,9	15,0	0,0497		
	300	-	67	15,6	15,7	0,0548		
	315	-	74	16,0	16,1	0,0587		
	355	-	94	17,3	17,4	0,0689		
	400	-	117	18,6	18,7	0,0803		
	450	-	142	19,9	20,0	0,0931		
	500	-	167	21,2	21,3	0,1058		
	550	-	192	22,3	22,4	0,1186		
	560	-	197	22,6	23,0	0,1211	BFN	
	600	-	217	23,7	24,1	0,1313		
	630	-	232	24,5	24,9	0,1390		
	650	7	242	25,0	25,4	0,1441		
	700	32	267	26,4	26,8	0,1568		
	710	37	272	26,7	27,1	0,1594		
	750	57	292	27,7	28,1	0,1696		M3
	800	82	317	29,1	29,5	0,1823		
300 x	200	-	17	12,9	13,0	0,0316	BFL	M2
	225	-	29	13,7	13,8	0,0385		
	250	-	42	14,4	14,5	0,0454		
	280	-	57	15,3	15,4	0,0536		
	300	-	67	16,3	16,4	0,0591		
	315	-	74	16,7	16,8	0,0633		
	355	-	94	18,0	18,1	0,0743		
	400	-	117	19,2	19,3	0,0866		
	450	-	142	20,6	20,7	0,1004		
	500	-	167	22,0	22,1	0,1141		
	550	-	192	22,8	23,2	0,1279	BFN	
	560	-	197	23,1	23,5	0,1306		
	600	-	217	24,2	24,6	0,1416		
	630	-	232	25,0	25,4	0,1499		
	650	7	242	25,5	25,9	0,1554		
	700	32	267	26,8	27,2	0,1691		
	710	37	272	27,1	27,5	0,1719		
	750	57	292	28,2	28,6	0,1829		M3
	800	82	317	29,5	29,9	0,1966		
315 x	200	-	17	13,2	13,3	0,0334	BFL	M2
	225	-	29	14,1	14,2	0,0406		
	250	-	42	14,8	14,9	0,0479		
	280	-	57	15,7	15,8	0,0566		
	300	-	67	16,7	16,8	0,0624		
	315	-	74	17,1	17,2	0,0667		
	355	-	94	18,5	18,6	0,0783		
	400	-	117	19,7	19,8	0,0914		
	450	-	142	21,1	21,2	0,1059		
	500	-	167	22,5	22,6	0,1204		
	550	-	192	23,4	23,8	0,1349	BFN	

Sizes in increments of 5 mm can be manufactured on request.

* *For designs with BKN a weight of 0.5 kg must be added.*

A x B [mm]		Damper blades overlaps a [mm]	Damper blades overlaps c [mm]	Weight Man. [kg]	Weight Actu. [kg]*	Free area S_f [m²]	Spring return actuator	Manual control
315 x	600	-	217	24,8	25,2	0,1648	BFN	M2
	630	-	232	25,6	26,0	0,1581		
	650	7	242	26,1	26,5	0,1639		
	700	32	267	27,5	27,9	0,1784		
	710	37	272	27,8	28,2	0,1813		
	750	57	292	28,9	29,3	0,1929		M3
	800	82	317	30,2	30,6	0,2074		
355 x	200	-	17	14,1	14,2	0,0380	BFL	M2
	225	-	29	15,0	15,1	0,0462		
	250	-	42	15,8	15,9	0,0545		
	280	-	57	16,7	16,8	0,0644		
	300	-	67	17,7	17,8	0,0710		
	315	-	74	18,2	18,3	0,0759		
	355	-	94	19,6	19,7	0,0891		
	400	-	117	21,0	21,1	0,1040		
	450	-	142	22,4	22,5	0,1205		
	500	-	167	23,9	24,3	0,1370	BFN	
	550	-	192	24,9	25,3	0,1535		
	560	-	197	25,2	25,6	0,1568		
	600	-	217	26,4	26,8	0,1700		
	630	-	232	27,2	27,6	0,1799		
	650	7	242	27,8	28,2	0,1865		
	700	32	267	29,3	29,7	0,2030		
	710	37	272	29,6	30,0	0,2063		
	750	57	292	30,7	31,1	0,2195		M3
	800	82	317	32,2	34,3	0,2360	BF	
400 x	200	-	17	15,1	15,2	0,0431	BFL	M2
	225	-	29	16,1	16,2	0,0525		
	250	-	42	16,9	17,0	0,0619		
	280	-	57	17,9	18,0	0,0731		
	300	-	67	18,9	19,0	0,0806		
	315	-	74	19,4	19,5	0,0863		
	355	-	94	20,9	21,0	0,1013		
	400	-	117	22,4	22,5	0,1181		
	450	-	142	23,9	24,0	0,1369		
	500	-	167	25,5	25,9	0,1556	BFN	
	550	-	192	26,6	27,0	0,1744		
	560	-	197	26,9	27,3	0,1781		
	600	-	217	28,2	28,6	0,1931		
	630	-	232	29,1	29,5	0,2044		
	650	7	242	29,7	30,1	0,2119		
	700	32	267	31,3	31,7	0,2306		
	710	37	272	31,6	32,0	0,2344		
	750	57	292	32,8	34,9	0,2494	BF	M3
	800	82	317	34,4	36,5	0,2681		
450 x	200	-	17	16,2	16,3	0,0489	BFL	M2
	225	-	29	17,3	17,4	0,0595		
	250	-	42	18,2	18,3	0,0701		
	280	-	57	19,2	19,3	0,0829		
	300	-	67	20,3	20,4	0,0914		
	315	-	74	20,8	20,9	0,0978		
	355	-	94	22,4	22,5	0,1148		
	400	-	117	23,9	24,0	0,1339		
	450	-	142	25,6	26,0	0,1551	BFN	

A x B [mm]		Damper blades overlaps a [mm]	Damper blades overlaps c [mm]	Weight Man. [kg]	Weight Actu. [kg]*	Free area S_f [m²]]	Spring return actuator	Manual control
450 x	500	-	167	27,3	27,7	0,1764	BFN	M2
	550	-	192	28,5	28,9	0,1976		
	560	-	197	28,8	29,2	0,2019		
	600	-	217	30,2	30,6	0,2189		
	630	-	232	31,2	31,6	0,2316		
	650	7	242	31,8	32,2	0,2401		
	700	32	267	33,5	35,6	0,2614	BF	
	710	37	272	33,8	35,9	0,2656		
	750	57	292	35,2	37,3	0,2826		M3
	800	82	317	36,8	38,9	0,3039		
500 x	200	-	17	17,3	17,4	0,0546	BFL	M2
	225	-	29	18,4	18,5	0,0665		
	250	-	42	19,4	19,5	0,0784		
	280	-	57	20,6	20,7	0,0926		
	300	-	67	21,6	21,7	0,1021		
	315	-	74	22,2	22,3	0,1093		
	355	-	94	23,9	24,0	0,1283		
	400	-	117	25,5	25,6	0,1496		
	450	-	142	27,3	27,7	0,1734	BFN	
	500	-	167	29,1	29,5	0,1971		
	550	-	192	30,7	31,1	0,2209		
	560	-	197	31,1	31,5	0,2256		
	600	-	217	32,6	33,0	0,2446		
	630	-	232	33,7	34,1	0,2589		
	650	7	242	34,4	36,5	0,2684	BF	
	700	32	267	36,3	38,4	0,2921		
	710	37	272	36,6	38,7	0,2969		
	750	57	292	38,1	40,2	0,3159		M3
	800	82	317	39,9	42,0	0,3396		
550 x	200	-	17	18,4	18,5	0,0604	BFL	M2
	225	-	29	19,6	19,7	0,0735		
	250	-	42	20,7	20,8	0,0866		
	280	-	57	21,9	22,0	0,1024		
	300	-	67	23,0	23,1	0,1129		
	315	-	74	23,6	23,7	0,1208		
	355	-	94	25,3	25,4	0,1418		
	400	-	117	27,1	27,5	0,1654	BFN	
	450	-	142	29,0	29,4	0,1916		
	500	-	167	31,2	31,6	0,2179		
	550	-	192	32,6	33,0	0,2441		
	560	-	197	33,0	33,4	0,2494		
	600	-	217	34,6	35,0	0,2704		
	630	-	232	35,8	37,9	0,2861	BF	
	650	7	242	36,6	38,7	0,2966		
	700	32	267	38,5	40,6	0,3229		
	710	37	272	38,9	41,0	0,3281		
	750	57	292	40,4	42,5	0,3491		M3
	800	82	317	42,4	44,5	0,3754		
560 x	200	-	17	18,7	18,8	0,0615	BFL	M2
	225	-	29	19,9	20,0	0,0749		
	250	-	42	20,9	21,0	0,0883		
	280	-	57	22,2	22,3	0,1043		
	300	-	67	23,2	23,3	0,1150		
	315	-	74	23,8	23,9	0,1231		

Sizes in increments of 5 mm can be manufactured on request.

* *For designs with BKN a weight of 0.5 kg must be added.*

A x B [mm]		Damper blades overlaps a [mm]	Damper blades overlaps c [mm]	Weight Man. [kg]	Weight Actu. [kg]*	Free area S_f [m²]	Spring return actuator	Manual control
560 x	355	-	94	25,6	25,7	0,1445	BFL	M2
	400	-	117	27,4	27,8	0,1685	BFN	
	450	-	142	29,3	29,7	0,1953		
	500	-	167	31,5	31,9	0,2220		
	550	-	192	33,0	33,4	0,2488		
	560	-	197	33,4	33,8	0,2541		
	600	-	217	35,0	35,4	0,2755		
	630	-	232	36,2	38,3	0,2916	BF	
	650	7	242	37,0	39,1	0,3023		
	700	32	267	38,9	41,0	0,3290		
	710	37	272	39,3	41,4	0,3344		
	750	57	292	40,9	43,0	0,3558		M3
	800	82	317	42,9	45,0	0,3825		
600 x	200	-	17	19,3	19,4	0,0661	BFL	M2
	225	-	29	20,5	20,6	0,0805		
	250	-	42	21,6	21,7	0,0949		
	280	-	57	22,9	23,0	0,1121		
	300	-	67	23,9	24,0	0,1236		
	315	-	74	24,5	24,6	0,1323		
	355	-	94	26,3	26,4	0,1553		
	400	-	117	28,1	28,5	0,1811	BFN	
	450	-	142	30,1	30,5	0,2099		
	500	-	167	32,3	32,7	0,2386		
	550	-	192	33,8	34,2	0,2674		
	560	-	197	34,2	34,6	0,2731		
	600	-	217	35,9	38,0	0,2961	BF	
	630	-	232	37,1	39,2	0,3134		
	650	7	242	37,8	39,9	0,3249		
	700	32	267	39,8	41,9	0,3536		
	710	37	272	40,2	42,3	0,3594		
	750	57	292	41,8	43,9	0,3824		M3
	800	82	317	43,8	45,9	0,4111		
630 x	200	-	17	20,0	20,1	0,0696	BFL	M2
	225	-	29	21,2	21,3	0,0847		
	250	-	42	22,3	22,4	0,0998		
	280	-	57	23,6	23,7	0,1180		
	300	-	67	24,7	24,8	0,1301		
	315	-	74	25,3	25,4	0,1392		
	355	-	94	27,2	27,3	0,1634		
	400	-	117	29,0	29,4	0,1906	BFN	
	450	-	142	31,1	31,5	0,2208		
	500	-	167	33,4	33,8	0,2511		
	550	-	192	34,9	35,3	0,2813		
	560	-	197	35,4	35,8	0,2874		
	600	-	217	37,0	39,1	0,3116	BF	
	630	-	232	38,3	40,4	0,3297		
	650	7	242	39,1	41,2	0,3418		
	700	32	267	41,1	43,2	0,3721		
	710	37	272	41,5	43,6	0,3781		
	750	57	292	43,2	45,3	0,4023		M3
	800	82	317	45,2	47,3	0,4326		M4
650 x	200	-	17	20,4	20,5	0,0719	BFL	M2
	225	-	29	21,7	21,8	0,0875		
	250	-	42	22,8	22,9	0,1031		

A x B [mm]		Damper blades overlaps a [mm]	Damper blades overlaps c [mm]	Weight Man. [kg]	Weight Actu. [kg]*	Free area S_f [m²]	Spring return actuator	Manual control
650 x	280	-	57	24,2	24,3	0,1219	BFL	M2
	300	-	67	25,2	25,3	0,1344		
	315	-	74	25,9	26,0	0,1438		
	355	-	94	27,8	27,9	0,1688		
	400	-	117	29,7	30,1	0,1969	BFN	
	450	-	142	31,7	32,1	0,2281		
	500	-	167	34,1	34,5	0,2594		
	550	-	192	35,7	36,1	0,2906		
	560	-	197	36,1	38,2	0,2969	BF	
	600	-	217	37,8	39,9	0,3219		
	630	-	232	39,1	41,2	0,3406		
	650	7	242	39,9	42,0	0,3531		
	700	32	267	42,0	44,1	0,3844		
	710	37	272	42,4	44,5	0,3906		
	750	57	292	44,1	46,2	0,4156		M3
	800	82	317	46,2	48,3	0,4469		M4
700 x	200	-	17	21,5	21,6	0,0776	BFL	M2
	225	-	29	22,8	22,9	0,0945		
	250	-	42	24,0	24,1	0,1114		
	280	-	57	25,4	25,5	0,1316		
	300	-	67	26,5	26,6	0,1451		
	315	-	74	27,2	27,3	0,1553		
	355	-	94	29,2	29,6	0,1823	BFN	
	400	-	117	31,2	31,6	0,2126		
	450	-	142	33,3	33,7	0,2464		
	500	-	167	35,8	36,2	0,2801		
	550	-	192	37,5	39,6	0,3139	BF	
	560	-	197	38,0	40,1	0,3206		
	600	-	217	39,7	41,8	0,3476		
	630	-	232	41,1	43,2	0,3679		
	650	7	242	41,9	44,0	0,3814		
	700	32	267	44,1	46,2	0,4151		
	710	37	272	44,6	46,7	0,4219		
	750	57	292	46,3	48,4	0,4489		M3
	800	82	317	48,5	50,6	0,4826		M4
710 x	200	-	17	21,7	21,8	0,0788	BFL	M2
	225	-	29	23,0	23,1	0,0959		
	250	-	42	24,3	24,4	0,1130		
	280	-	57	25,7	25,8	0,1336		
	300	-	67	26,8	26,9	0,1473		
	315	-	74	27,5	27,6	0,1576		
	355	-	94	29,5	29,9	0,1850	BFN	
	400	-	117	31,5	31,9	0,2158		
	450	-	142	33,7	34,1	0,2500		
	500	-	167	36,1	36,5	0,2843		
	550	-	192	37,9	40,0	0,3185	BF	
	560	-	197	38,3	40,4	0,3254		
	600	-	217	40,1	42,2	0,3528		
	630	-	232	41,5	43,6	0,3733		
	650	7	242	42,3	44,4	0,3870		
	700	32	267	44,6	46,7	0,4213		
	710	37	272	45,0	47,1	0,4281		M3
	750	57	292	46,8	48,9	0,4555		
	800	82	317	49,0	51,1	0,4898		M4

Sizes in increments of 5 mm can be manufactured on request.

* *For designs with BKN a weight of 0.5 kg must be added.*

A x B [mm]		Damper blades overlaps a [mm]	Damper blades overlaps c [mm]	Weight Man. [kg]	Weight Actu. [kg]*	Free area S_f [m²]	Spring return actuator	Manual control
750 x	200	-	17	22,5	22,6	0,0834	BFL	M2
	225	-	29	24,0	24,1	0,1015		
	250	-	42	25,2	25,3	0,1196		
	280	-	57	26,7	26,8	0,1414		
	300	-	67	27,9	28,0	0,1559		
	315	-	74	28,5	28,6	0,1668		
	355	-	94	30,6	31,0	0,1958	BFN	
	400	-	117	32,7	33,1	0,2284		
	450	-	142	35,0	35,4	0,2646		
	500	-	167	37,5	37,9	0,3009		
	550	-	192	39,4	41,5	0,3371	BF	
	560	-	197	39,8	41,9	0,3444		
	600	-	217	41,7	43,8	0,3734		
	630	-	232	43,1	45,2	0,3951		
	650	7	242	44,0	46,1	0,4096		
	700	32	267	46,3	48,4	0,4459		M3
	710	37	272	46,8	48,9	0,4531		
	750	57	292	48,6	50,7	0,4821		
	800	82	317	50,9	53,0	0,5184		M4
800 x	200	-	17	23,6	23,7	0,0891	BFL	M2
	225	-	29	25,1	25,2	0,1085		
	250	-	42	26,4	26,5	0,1279		
	280	-	57	28,0	28,1	0,1511		
	300	-	67	29,2	29,3	0,1666		
	315	-	74	29,9	30,0	0,1783		
	355	-	94	32,1	32,5	0,2093	BFN	
	400	-	117	34,2	34,6	0,2441		
	450	-	142	36,6	37,0	0,2829		
	500	-	167	39,2	39,6	0,3216		
	550	-	192	41,2	43,3	0,3604	BF	
	560	-	197	41,7	43,8	0,3681		
	600	-	217	43,6	45,7	0,3991		
	630	-	232	45,1	47,2	0,4224		M3
	650	7	242	46,0	48,1	0,4379		
	700	32	267	48,4	50,5	0,4766		
	710	37	272	48,9	51,0	0,4844		
	750	57	292	50,9	53,0	0,5154		
	800	82	317	53,3	55,4	0,5541		M4
900 x	200	-	17	25,8	25,9	0,1006	BFL	M2
	225	-	29	27,4	27,5	0,1225		
	250	-	42	28,9	29,0	0,1444		
	280	-	57	30,6	30,7	0,1706		
	300	-	67	31,8	31,9	0,1881		
	315	-	74	32,6	33,0	0,2013	BFN	
	355	-	94	34,9	35,3	0,2363		
	400	-	117	37,2	37,6	0,2756		
	450	-	142	39,8	40,2	0,3194		
	500	-	167	42,7	44,8	0,3631	BF	
	550	-	192	44,9	47,0	0,4069		
	560	-	197	45,4	47,5	0,4156		M3
	600	-	217	47,5	49,6	0,4506		
	630	-	232	49,1	51,2	0,4769		
	650	7	242	50,1	52,2	0,4944		
	700	32	267	52,7	54,8	0,5381		
900 x	710	37	272	53,3	55,4	0,5469	BF	M3
	750	57	292	55,4	57,5	0,5819		
	800	82	317	58,0	60,1	0,6256		M4
1000 x	200	-	17	28,0	28,1	0,1121	BFL	M2
	225	-	29	29,7	29,8	0,1365		
	250	-	42	31,3	31,4	0,1609		
	280	-	57	33,2	33,3	0,1901		
	300	-	67	34,4	34,8	0,2096	BFN	
	315	-	74	35,3	35,7	0,2243		
	355	-	94	37,8	38,2	0,2633		
	400	-	117	40,3	40,7	0,3071		
	450	-	142	43,1	43,5	0,3559		
	500	-	167	46,2	48,3	0,4046	BF	
	550	-	192	48,5	50,6	0,4534		M3
	560	-	197	49,1	51,2	0,4631		
	600	-	217	51,4	53,5	0,5021		
	630	-	232	53,1	55,2	0,5314		
	650	7	242	54,2	56,3	0,5509		
	700	32	267	57,0	59,1	0,5996		
	710	37	272	57,6	59,7	0,6094		
	750	57	292	59,9	62,0	0,6484		
	800	82	317	62,7	64,8	0,6971		M4
1100 x	200	-	17	30,1	30,2	0,1236	BFL	M2
	225	-	29	32,0	32,1	0,1505		
	250	-	42	33,7	33,8	0,1774		
	280	-	57	35,8	35,9	0,2096		
	300	-	67	37,0	37,4	0,2311	BFN	
	315	-	74	38,0	38,4	0,2473		
	355	-	94	40,6	41,0	0,2903		
	400	-	117	43,3	43,7	0,3386		
	450	-	142	46,4	48,5	0,3924	BF	
	500	-	167	49,7	51,8	0,4461		M3
	550	-	192	52,2	54,3	0,4999		
	560	-	197	52,8	54,9	0,5106		
	600	-	217	55,3	57,4	0,5536		
	630	-	232	57,1	59,2	0,5859		
	650	7	242	58,3	60,4	0,6074		
	700	32	267	61,4	63,5	0,6611		
	710	37	272	62,0	64,1	0,6719		
	750	57	292	64,4	66,5	0,7149		
	800	82	317	67,5	69,6	0,7686		M4
1250 x	200	-	17	33,1	33,2	0,1409	BFL	M2
	225	-	29	35,1	35,2	0,1715		
	250	-	42	37,0	37,4	0,2021		
	280	-	57	39,3	39,7	0,2389	BFN	
	300	-	67	40,5	40,9	0,2634		
	315	-	74	41,5	41,9	0,2818		
	355	-	94	44,3	44,7	0,3308		
	400	-	117	47,3	47,7	0,3859		
	450	-	142	50,5	52,6	0,4471	BF	M3
	500	-	167	54,1	56,2	0,5084		
	550	-	192	56,9	59,0	0,5696		
	560	-	197	57,5	59,6	0,5819		
	600	-	217	60,2	62,3	0,6309		

Sizes in increments of 5 mm can be manufactured on request.

* *For designs with BKN a weight of 0.5 kg must be added.*

A x B [mm]		Damper blades overlaps		Weight		Free area S_f [m²]	Spring return actuator	Manual control
		a [mm]	c [mm]	Man. [kg]	Actu. [kg]*			
1250 x	630	-	232	62,2	64,3	0,6676	BF	M3
	650	7	242	63,5	65,6	0,6921		
	700	32	267	66,8	68,9	0,7534		M4
	710	37	272	67,4	69,5	0,7656		
	750	57	292	70,0	72,1	0,8146		M5
	800	82	317	73,3	75,4	0,8759		
1400 x	200	-	17	36,3	36,4	0,1581	BFL	M2
	225	-	29	38,5	38,6	0,1925		
	250	-	42	40,6	41,0	0,2269	BFN	
	280	-	57	43,1	43,5	0,2681		
	300	-	67	44,4	44,8	0,2956		
	315	-	74	45,4	45,8	0,3163		
	355	-	94	48,5	48,9	0,3713		
	400	-	117	51,8	53,9	0,4331	BF	M3
	450	-	142	55,3	57,4	0,5019		
	500	-	167	59,2	61,3	0,5706		
	550	-	192	62,3	64,4	0,6394		
	560	-	197	63,0	65,1	0,6531		
	600	-	217	65,9	68,0	0,7081		
	630	-	232	68,0	70,1	0,7494		M4
	650	7	242	69,5	71,6	0,7769		M5
	700	32	267	73,1	75,2	0,8456		

A x B [mm]		Damper blades overlaps		Weight		Free area S_f [m²]	Spring return actuator	Manual control
		a [mm]	c [mm]	Man. [kg]	Actu. [kg]*			
1400 x	710	37	272	73,8	75,9	0,8594	BF	M5
	750	57	292	76,7	78,8	0,9144		
	800	82	317	80,3	82,4	0,9831		
1500 x	200	-	17	38,4	38,5	0,1696	BFL	M2
	225	-	29	40,8	40,9	0,2065		
	250	-	42	43,0	43,4	0,2434	BFN	
	280	-	57	45,6	46,0	0,2876		
	300	-	67	46,9	47,3	0,3171		
	315	-	74	48,1	48,5	0,3393		
	355	-	94	51,3	51,7	0,3983		M3
	400	-	117	54,8	56,9	0,4646	BF	
	450	-	142	58,5	60,6	0,5384		
	500	-	167	62,6	64,7	0,6121		
	550	-	192	65,9	68,0	0,6859		
	560	-	197	66,7	68,8	0,7006		
	600	-	217	69,7	71,8	0,7596		M4
	630	-	232	72,0	74,1	0,8039		M5
	650	7	242	73,5	75,6	0,8334		
	700	32	267	77,3	79,4	0,9071		
	710	37	272	78,1	80,2	0,9219		
	750	57	292	81,1	83,2	0,9809		
	800	82	317	84,9	87,0	1,0546		

Sizes in increments of 5 mm can be manufactured on request.

* *For designs with BKN a weight of 0.5 kg must be added.*

IV. INSTALLATION

Placement and installation

- The fire dampers are suitable for installation in arbitrary position in vertical and horizontal passages of fire separating constructions. The damper installation procedures must be done so that all load transfer from the fire separating constructions to the damper is absolutely excluded. Following air-conditioning duct must be suspended or supported so that all load transfer from the following duct to the fire damper is absolutely excluded. The gap between the installed damper and the fire separating construction must be perfectly filled with approved material.
- The damper must be installed so that the damper blade (in closed position) is situated in the fire separating construction - marked by the label BUILT-IN EDGE on the damper casing. If such solution is not possible, the duct between the fire separating construction and the damper blade must be protected according to the certified installation method → see pages 23 to 24
- During the installation and plastering process, the actuating mechanism must be protected (covered) against damage and pollution. The damper casing should not be deformed during bricking in. Once the damper is built in, the damper blade should not grind against the damper casing during opening or closing.
- The distance between the fire damper and the construction (wall, ceiling) must be 75 mm at the minimum, according to EN 1366-2. If two or more dampers are to be installed in one fire separating construction, the distance between adjacent dampers must be 200 mm at the minimum, according to EN 1366-2.

Minimum distance between the fire dampers and the construction

- minimum distance 200 mm between dampers, according to EN 1366-2
- minimum distance 75 mm between damper and construction (wall/ceiling), according to EN 1366-2
- recommended minimum distance 150 mm necessary for access to the actuator
- recommended minimum distance 250 mm necessary for access to the manual control

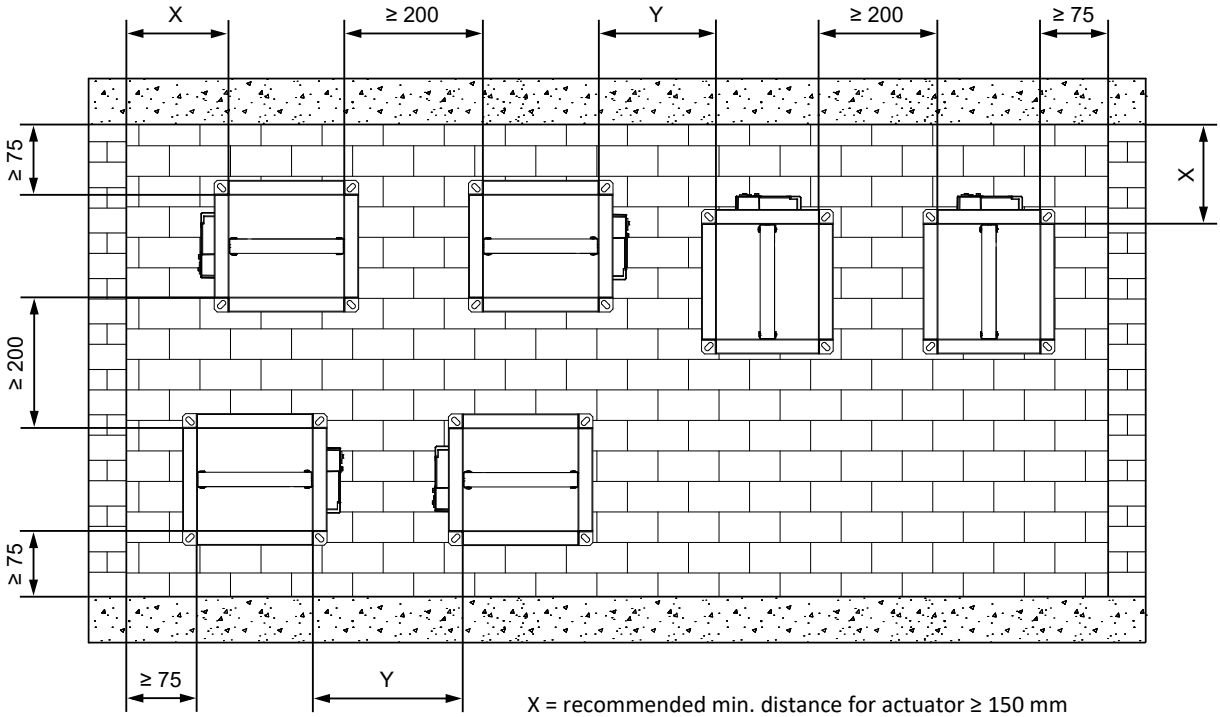

X = recommended min. distance for actuator ≥ 150 mm
X = recommended min. distance for manual control ≥ 250 mm

Y = min. distance for actuator ≥ 200 mm acc. to EN 1366-2
Y = recommended min. distance for manual control ≥ 250 mm

Built in edge

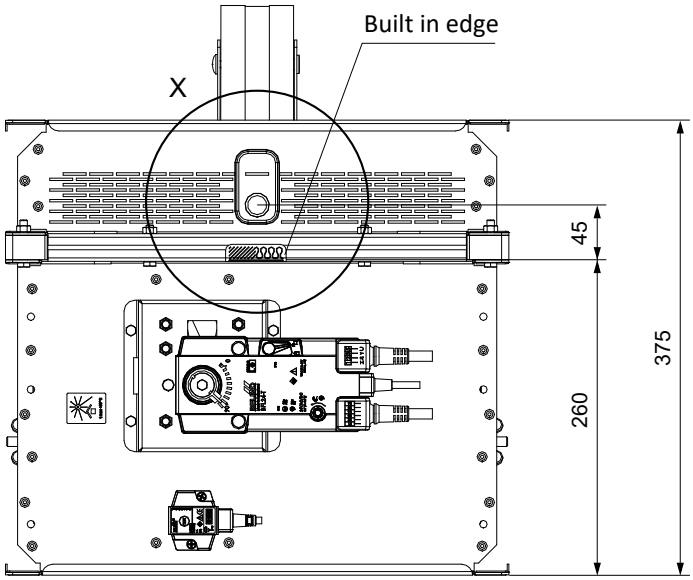

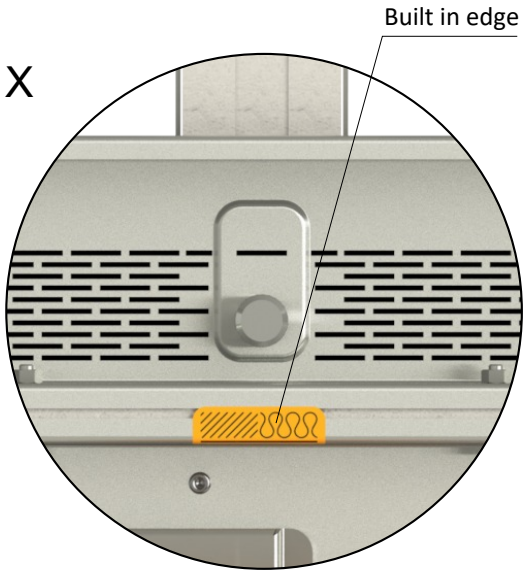

Dimensions of an installation opening

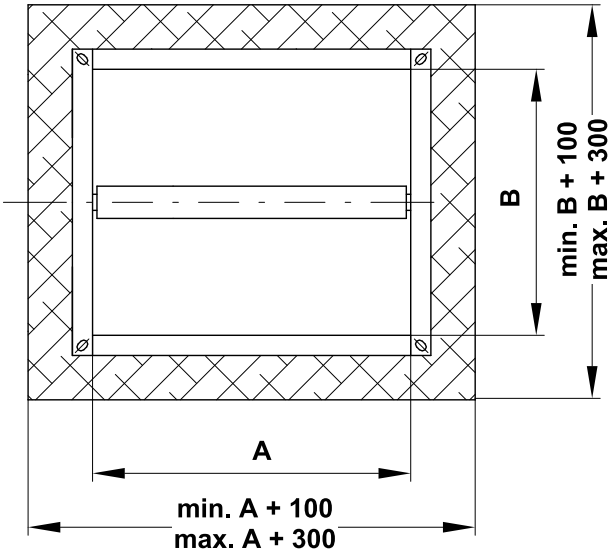

Statement of installations

Placement	wall/ceiling min. thickness [mm]	Method of installation	Fire resistance	Page
In solid wall consruction	150	Mortar or gypsum	EI 180 (v_e i↔o) S - 500 Pa	23
In solid ceiling contruction	150	Mortar or gypsum	EI 180 (h_o i↔o) S - 500 Pa	24

Installation in solid wall construction

In solid wall construction - mortar or gypsum

EI 180 (v_e i↔o) S - 500 Pa

- For connection following duct → see page 28

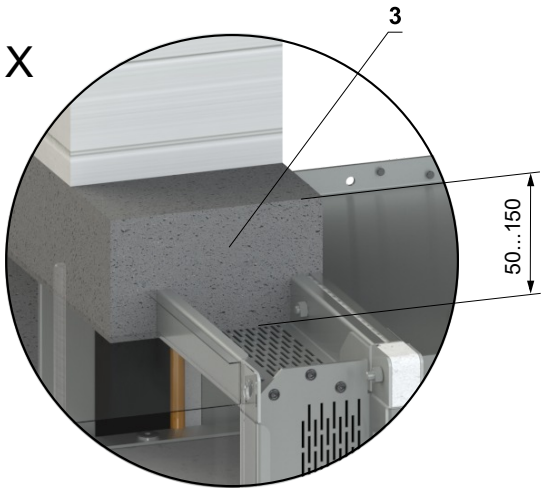

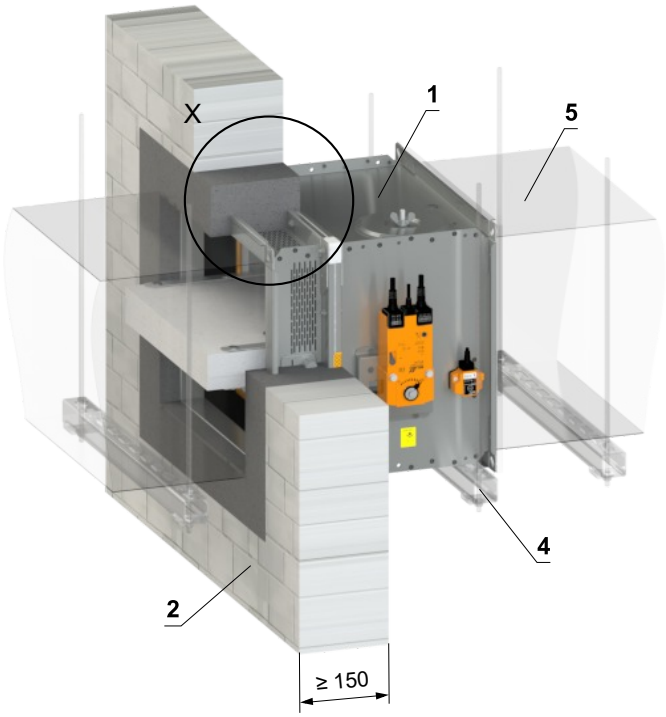

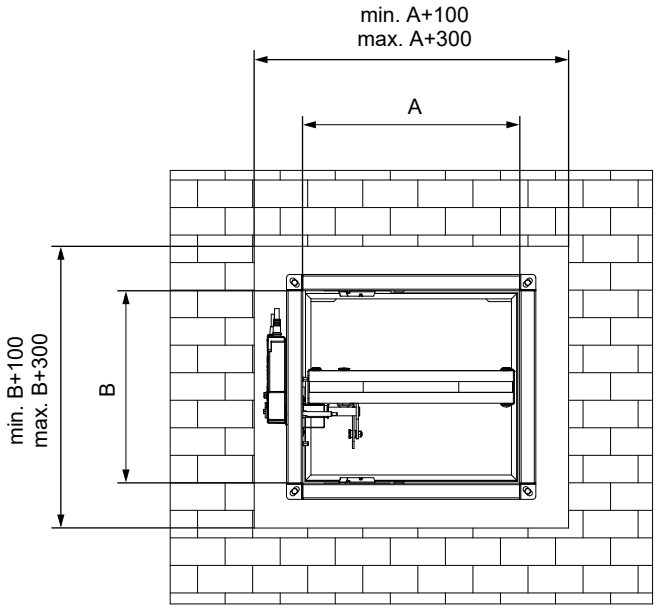

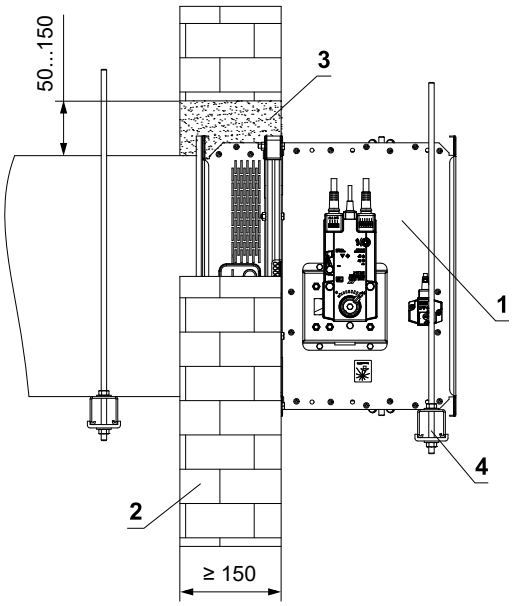

1 FDMQ 180
2 Solid wall construction
3 Mortar or gypsum
4 Profile with threaded rod → see pages 25 to 27
5 Duct

Installation in solid ceiling construction

In solid ceiling construction - mortar or gypsum

EI 180 (h_o i↔o) S - 500 Pa

- For connection following duct → see page 28
- The damper can be installed from both sides of the construction, i.e. from the top or the bottom side of the ceiling.

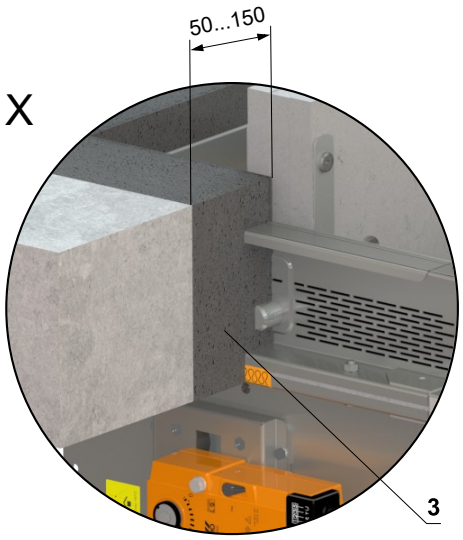

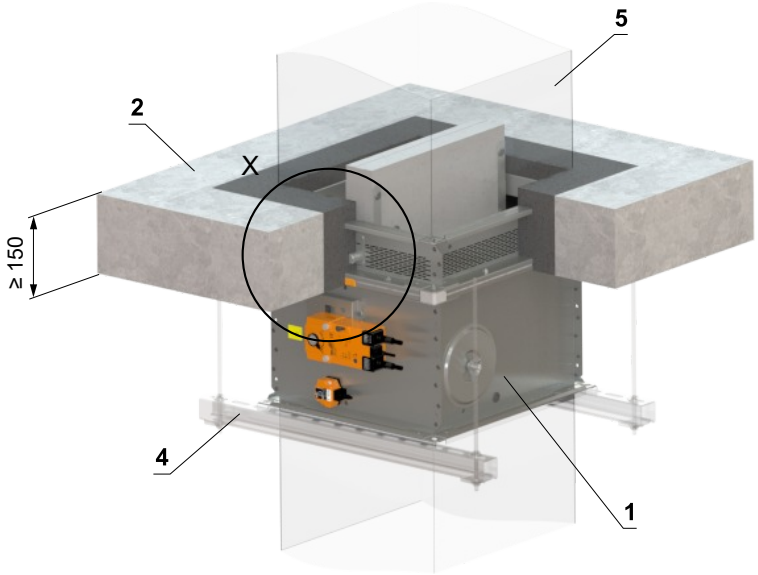

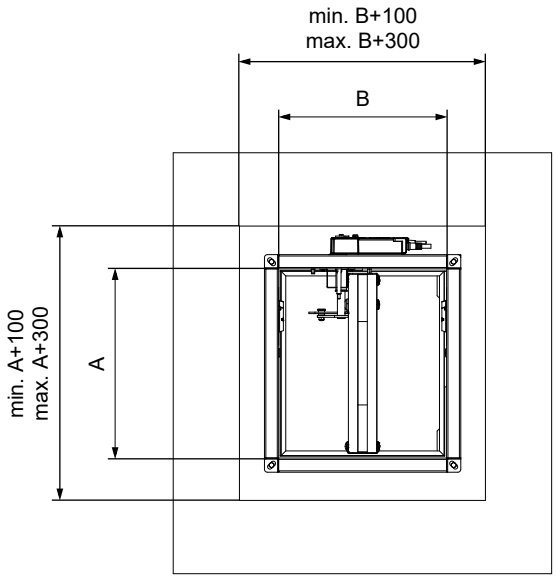

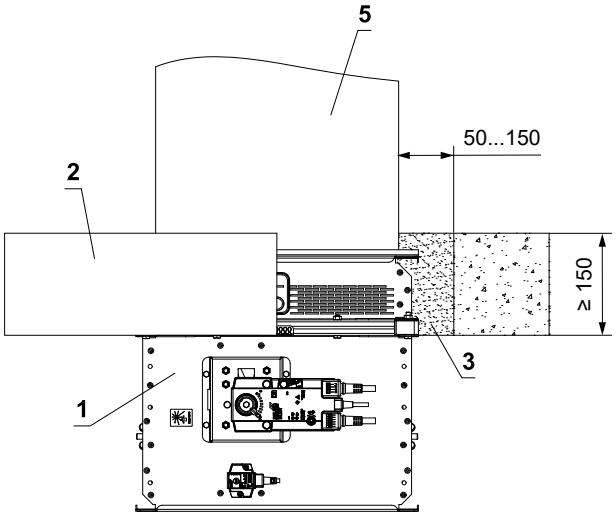

1 FDMQ 180
2 Solid ceiling construction
3 Mortar or gypsum
4 Profile with threaded rod → see pages 25 to 27
5 Duct

V. SUSPENSION SYSTEMS

Mounting to the ceiling wall

- The dampers must be suspended using threaded rods and mounting profiles. Their dimensioning depend on the weight of the damper.
- The dampers and the duct must be suspended separately.
- Following air-conditioning duct must be suspended or supported so that all load transfer from the following duct to the damper flanges is absolutely excluded. Adjacent duct must be suspended or supported, as required by the duct suppliers.

Examples of anchoring to the ceiling construction
Follow the instructions of fixing specialist or installation company

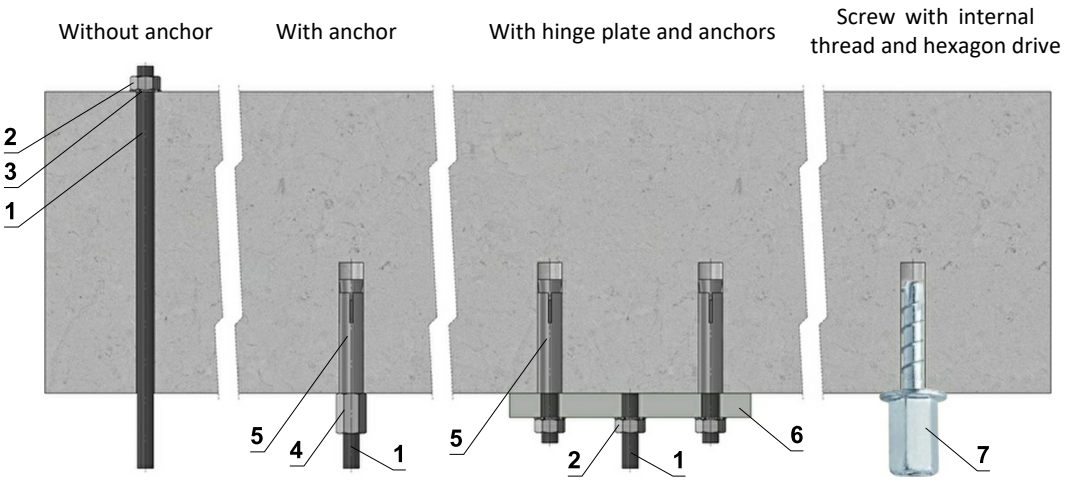

Hinge plates

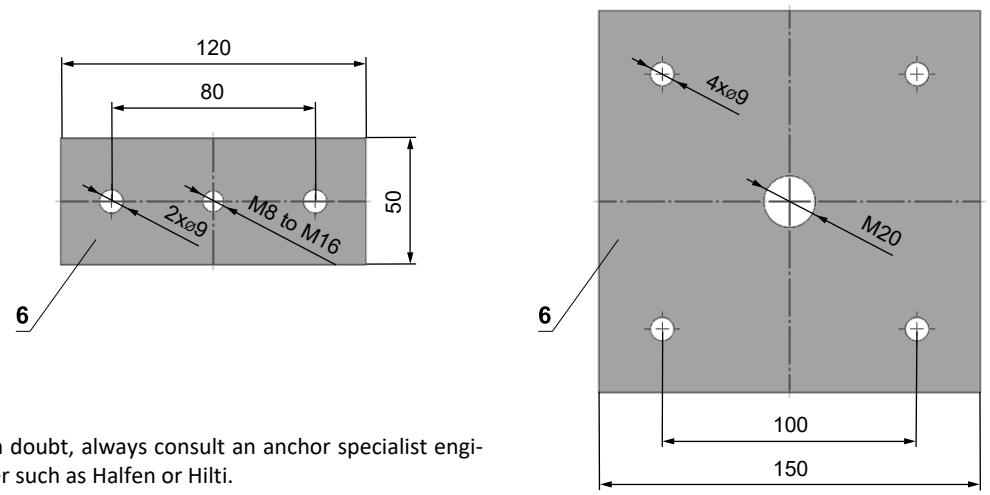

- If in doubt, always consult an anchor specialist engineer such as Halfen or Hilti.

1 Threaded rod M8 - M20
2 Nut M8 - M20
3 Washer for M8 - M20
4 Coupling Nut M8 - M20
5 Anchor
6 Hinge plate - min. thickness 10 mm
7 Concrete screw tested for fire resistance R30-R90, max. Tension up to 0.75 KN (length 35 mm)

Load capacities of threaded rods at the required fire resistance 120 min. < t ≤ 240 min.

Size	As [mm²]	Weight [kg]	
		for 1 rod	for 2 rods
M8	36,6	11	22
M10	58	17,5	35
M12	84,3	26	52
M16	157	48	96
M18	192	58,5	117
M20	245	75	150

Example of placing of mounting profiles HILTI

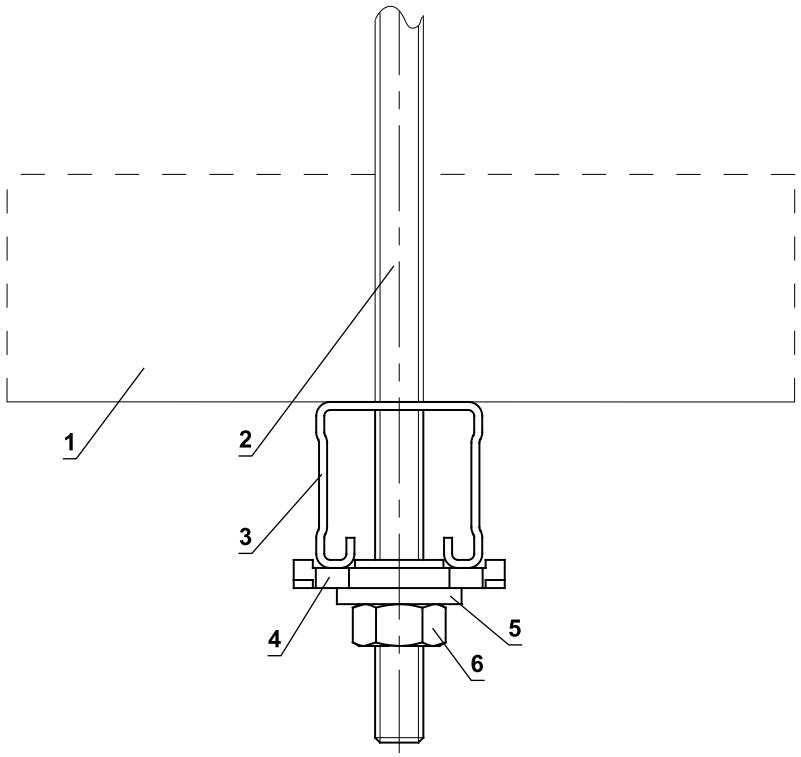

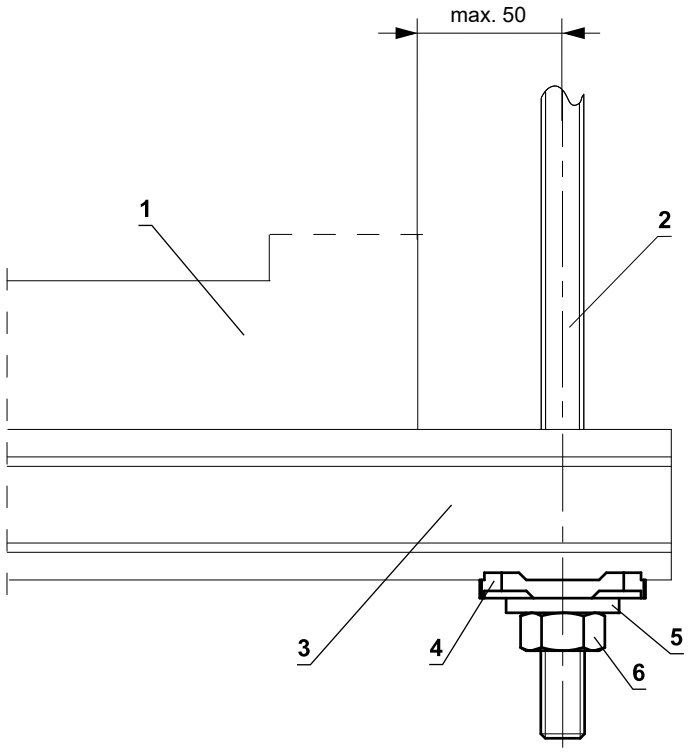

1 FDMQ 180
2 Threaded rod M8 - M12
3 Support HILTI MQ-41 or MQ-41/3
4 Bored plate HILTI MQZ-L
5 Washer for M8 - M12
6 Nut M8 - M12

Example of fixing FDMQ 180

In solid wall construction

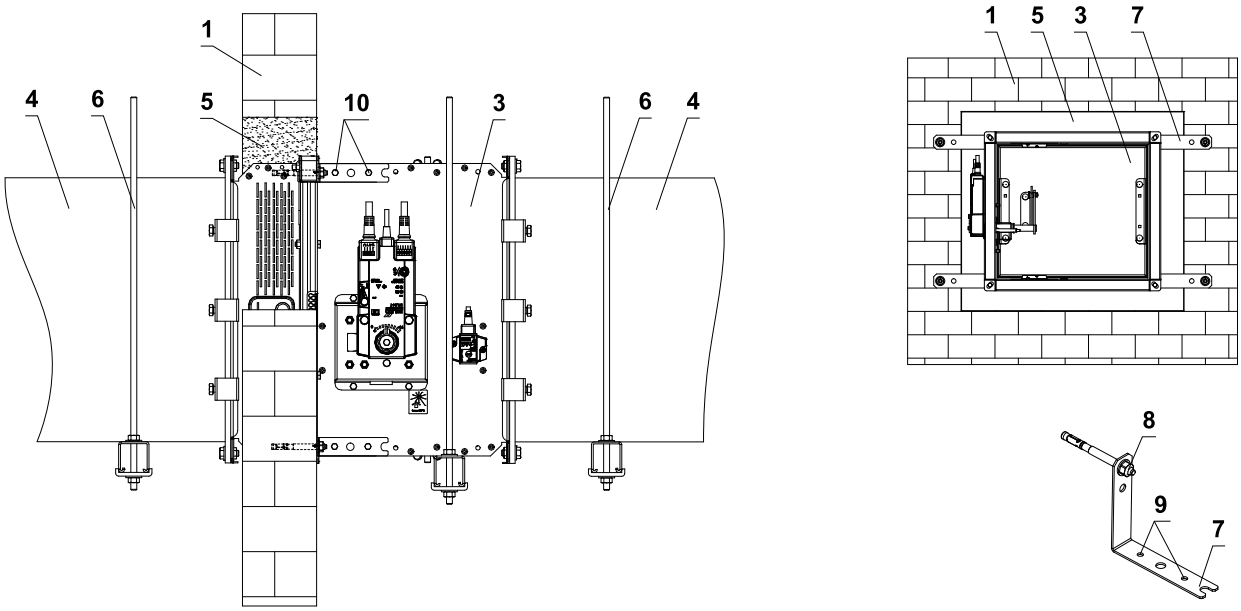

In gypsum wall construction

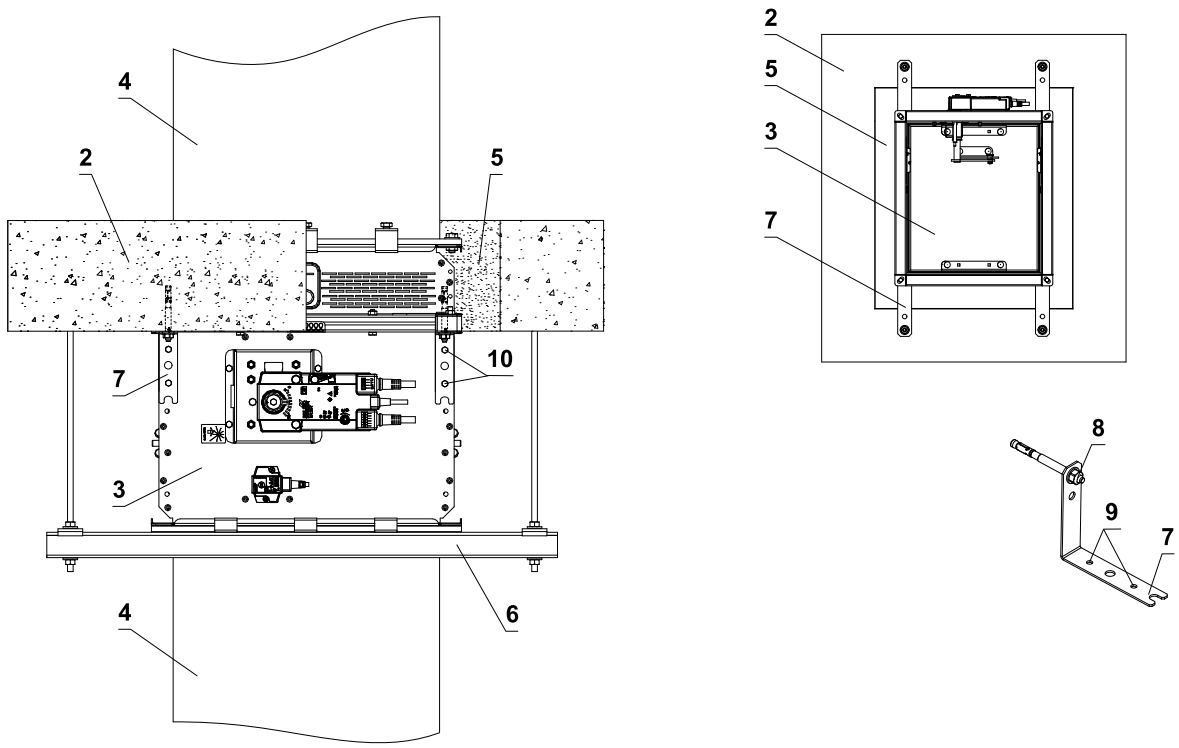

1 Solid wall construction
2 Solid ceiling construction
3 FDMQ 180
4 Duct
5 Mortar or gypsum
6 Profile with threaded rod → see page 26
7 Fixing element/steel holder for connecting damper to the wall (optional accessories MANDIK, a.s. or sheet metal min. thickness 2 mm and min. width 60 mm)
8 Nut M8 with anchor
9 Installation holes
10 Screw assembly M6 (screw M6x10, nut M6)

- The method of attachment must follow the minimum requirements for attachment and connection of ductwork in accordance with national regulations. Also, the elements can be suspended from the top, or supported from bottom, or fastened from the side.

Example of duct connection

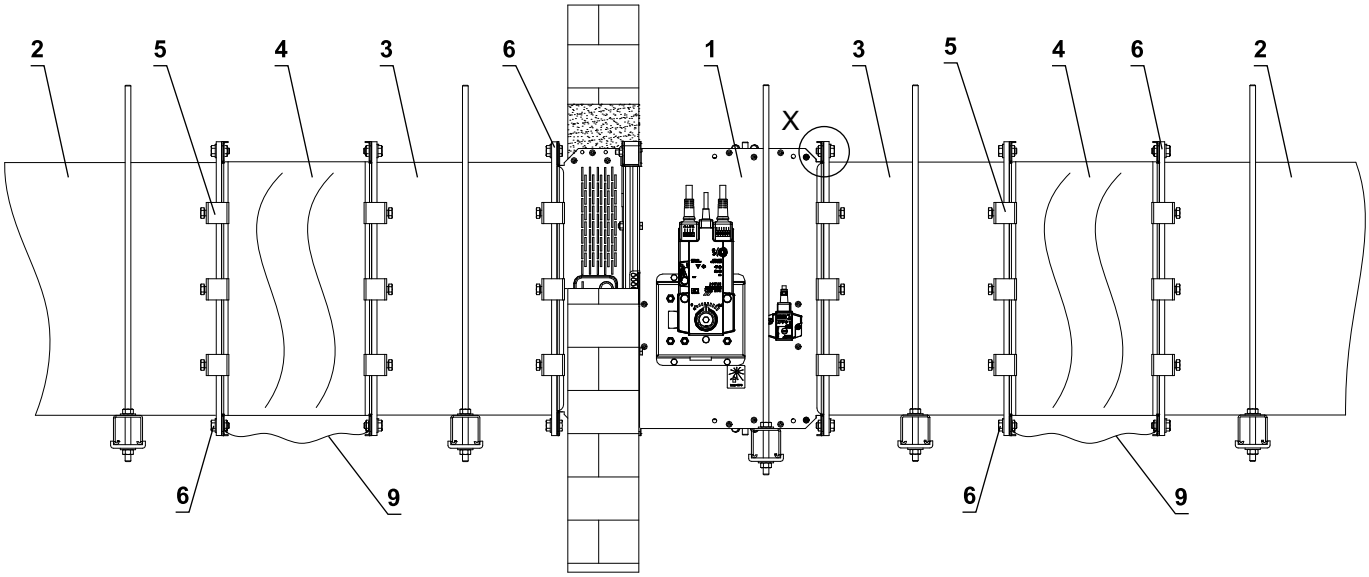

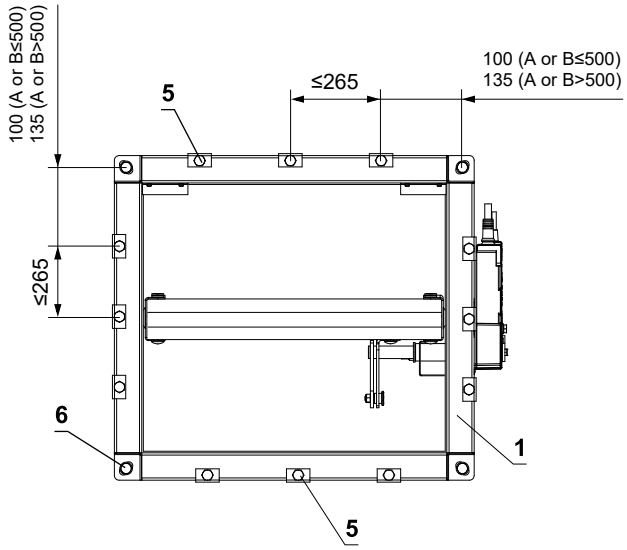

Electrically conductive connection

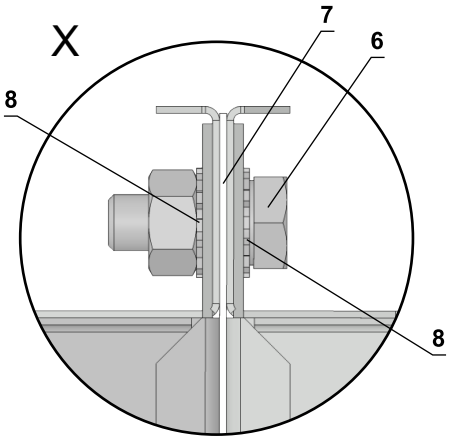

* min. one connection must be electrically conductive

1 FDMQ 180
2 Duct
3 Extension piece (if required)
4 Damping pad
5 Steel clamp min. screw M8
6 Screw assembly M8 (screw M8x20 mm, 2 pcs toothed lock washer M8, nut M8) *
7 Sealing
8 Toothed lock washer M8
9 Protective bonding conductor

VI. TECHNICAL DATA

Pressure loss

Pressure loss calculation

$$\Delta p = \xi \cdot \rho \cdot \frac{w^2}{2}$$

Δp	[Pa]	presure loss
w	[m/s]	air flow speed in nominal damper section
ρ	[kg/m³]	air density
ξ	[-]	coefficient of local pressure loss for the nominal damper section → see page 30

Determination of pressure loss by using diagram ρ = 1,2 kg/m³

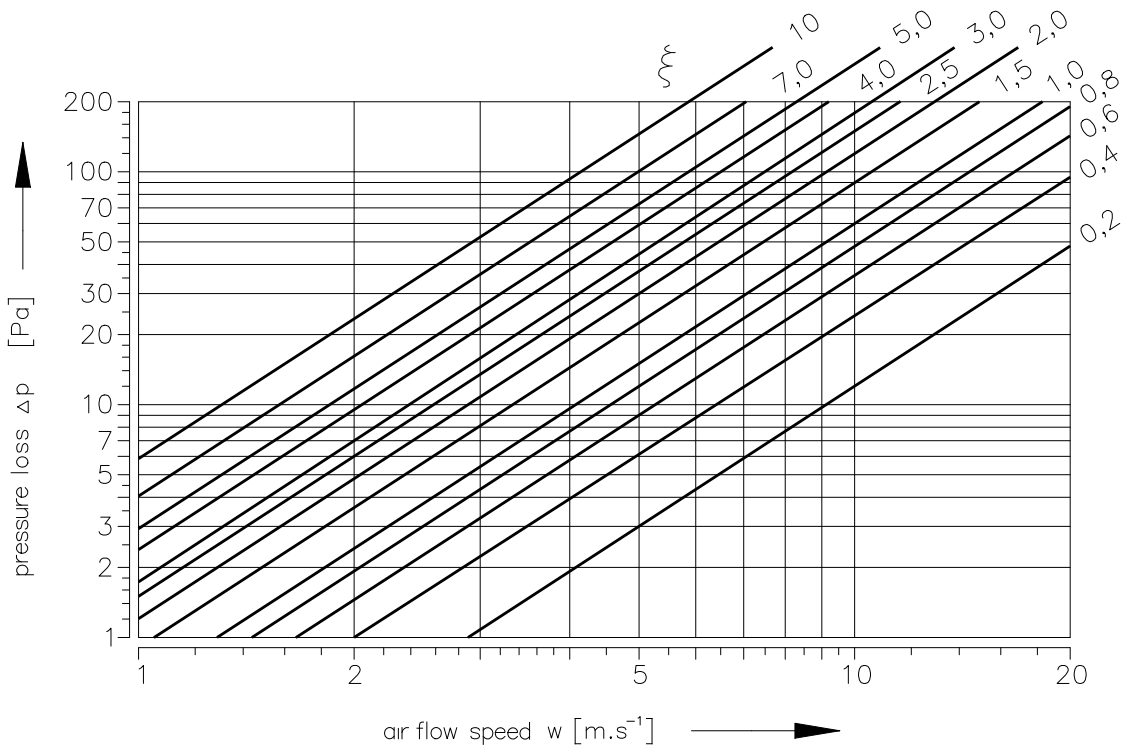

Coefficient of local pressure loss

	A												
B	**200**	**225**	**250**	**280**	**300**	**315**	**355**	**400**	**450**	**500**	**550**	**560**	**600**
200	2,035	1,953	1,878	1,775	1,714	1,634	1,565	1,508	1,459	1,419	1,401	1,385	1,363
225	1,516	1,374	1,347	1,310	1,270	1,225	1,165	1,106	1,088	1,053	1,023	1,011	1,003
250	1,218	1,174	1,134	1,071	1,014	0,976	0,932	0,899	0,869	0,846	0,831	0,823	0,816
280	1,107	1,061	1,024	0,974	0,914	0,863	0,805	0,779	0,757	0,744	0,735	0,718	0,712
300	0,981	0,943	0,901	0,848	0,798	0,742	0,710	0,695	0,658	0,649	0,643	0,639	0,624
315	0,815	0,788	0,755	0,716	0,673	0,647	0,619	0,594	0,574	0,559	0,548	0,543	0,536
355	0,686	0,655	0,629	0,598	0,568	0,545	0,519	0,500	0,482	0,468	0,460	0,456	0,451
400	0,590	0,563	0,542	0,512	0,493	0,467	0,447	0,428	0,414	0,402	0,395	0,390	0,387
450	0,517	0,496	0,477	0,454	0,427	0,408	0,391	0,375	0,362	0,350	0,348	0,342	0,337
500	0,465	0,447	0,433	0,405	0,387	0,367	0,350	0,336	0,325	0,315	0,312	0,308	0,302
550	0,440	0,422	0,407	0,383	0,359	0,341	0,331	0,313	0,301	0,299	0,290	0,287	0,284
560	0,421	0,406	0,387	0,364	0,349	0,331	0,316	0,303	0,293	0,285	0,281	0,277	0,275
600	0,399	0,382	0,369	0,346	0,328	0,313	0,300	0,292	0,281	0,269	0,263	0,254	0,251
630	0,384	0,370	0,356	0,334	0,317	0,302	0,288	0,277	0,267	0,259	0,246	0,251	0,249
650	0,369	0,354	0,341	0,321	0,308	0,294	0,276	0,266	0,259	0,249	0,237	0,241	0,238
700	0,359	0,344	0,332	0,316	0,299	0,284	0,271	0,258	0,252	0,242	0,229	0,228	0,226
710	0,354	0,340	0,326	0,310	0,294	0,277	0,265	0,255	0,245	0,238	0,226	0,226	0,224
750	0,340	0,331	0,318	0,295	0,279	0,267	0,254	0,245	0,237	0,229	0,226	0,222	0,218
800	0,329	0,318	0,305	0,290	0,272	0,258	0,246	0,236	0,227	0,221	0,217	0,215	0,211

	A											
B	**630**	**650**	**700**	**710**	**750**	**800**	**900**	**1000**	**1100**	**1250**	**1400**	**1500**
200	1,352	1,337	1,327	1,323	1,311	1,298	1,276	1,260	1,244	1,229	1,218	1,210
225	0,989	0,965	0,956	0,946	0,938	0,930	0,913	0,901	0,889	0,870	0,854	0,849
250	0,803	0,793	0,792	0,786	0,779	0,771	0,757	0,748	0,738	0,729	0,722	0,718
280	0,709	0,682	0,676	0,670	0,664	0,655	0,647	0,637	0,622	0,607	0,597	0,586
300	0,607	0,602	0,601	0,600	0,593	0,583	0,573	0,556	0,544	0,536	0,534	0,526
315	0,530	0,523	0,521	0,519	0,512	0,508	0,500	0,493	0,487	0,481	0,475	0,473
355	0,445	0,438	0,436	0,435	0,429	0,427	0,419	0,413	0,407	0,403	0,398	0,396
400	0,381	0,374	0,373	0,372	0,368	0,365	0,357	0,353	0,348	0,345	0,342	0,338
450	0,333	0,328	0,327	0,326	0,323	0,318	0,313	0,309	0,305	0,302	0,297	0,296
500	0,299	0,298	0,294	0,292	0,289	0,287	0,281	0,277	0,274	0,270	0,268	0,266
550	0,281	0,275	0,270	0,268	0,265	0,264	0,259	0,256	0,252	0,247	0,244	0,243
560	0,270	0,267	0,266	0,264	0,261	0,258	0,254	0,250	0,247	0,243	0,241	0,240
600	0,250	0,248	0,247	0,246	0,242	0,237	0,235	0,231	0,228	0,224	0,222	0,220
630	0,246	0,243	0,242	0,241	0,238	0,234	0,231	0,228	0,225	0,221	0,219	0,217
650	0,235	0,233	0,230	0,229	0,227	0,224	0,218	0,215	0,213	0,208	0,205	0,203
700	0,226	0,225	0,224	0,222	0,220	0,217	0,214	0,211	0,209	0,206	0,203	0,200
710	0,224	0,223	0,222	0,220	0,218	0,216	0,212	0,208	0,206	0,203	0,201	0,199
750	0,214	0,212	0,211	0,210	0,209	0,207	0,203	0,198	0,195	0,193	0,191	0,189
800	0,209	0,207	0,206	0,205	0,203	0,200	0,197	0,193	0,191	0,188	0,187	0,186

Noise data

Level of acoustic output corrected with filter A

$$L_{WA} = L_{W1} + 10 \log(S) + K_A$$

L_{WA}	[dB(A)]	level of acoustic output corrected with filter A
L_{W1}	[dB]	level of acoustic output L_{W1} related to the 1 m^2 section
S	[m^2]	duct cross section
K_A	[dB]	correction to the weight filter A

Level of acoustic output in octave ranges

$$L_{Woct} = L_{W1} + 10 \log(S) + L_{rel}$$

L_{Woct}	[dB]	spectrum of acoustic output in octave range
L_{W1}	[dB]	level of acoustic output L_{W1} related to the 1 m^2 section
S	[m^2]	duct cross section
L_{rel}	[dB]	relative level expressing the shape of the spectrum

Tables of acoustics values

Level of acoustic output L_{W1}[dB] related to the 1 m^2 section

	ξ [-]																
w [m/s]	**0,2**	**0,3**	**0,4**	**0,5**	**0,6**	**0,7**	**0,8**	**0,9**	**1**	**1,5**	**2**	**2,5**	**3**	**4**	**5**	**8**	**10**
2	15,5	18,7	20,9	22,6	24	25,2	26,3	27,2	28	31,2	33,4	35,1	36,5	38,8	40,5	44,2	45,9
3	26,1	29,2	31,5	33,2	34,6	35,8	36,9	37,8	38,6	41,7	44	45,7	47,1	49,4	51,1	54,7	56,5
4	33,6	36,7	39	40,7	42,1	43,3	44,3	45,3	46,1	49,2	51,5	53,2	54,6	56,9	58,6	62,2	64
5	39,4	42,5	44,8	46,5	47,9	49,1	50,2	51,1	51,9	55	57,3	59	60,4	62,7	64,4	68	69,8
6	44,1	47,3	49,5	51,3	52,7	53,9	54,9	55,8	56,6	59,8	62	63,8	65,2	67,4	69,2	72,8	74,5
7	48,2	51,3	53,5	55,3	56,7	57,9	58,9	59,8	60,7	63,8	66,1	67,8	69,2	71,4	73,2	76,8	78,6
8	51,6	54,8	57	58,8	60,2	61,4	62,4	63,3	64,1	67,3	69,5	71,3	72,7	74,9	76,7	80,3	82
9	54,7	57,9	60,1	61,8	63,2	64,4	65,5	66,4	67,2	70,4	72,6	74,3	75,7	78	79,7	83,4	85,1
10	57,4	60,6	62,8	64,6	66	67,2	68,2	69,1	70	73,1	75,3	77,1	78,5	80,7	82,5	86,1	87,9
11	59,9	63,1	65,3	67,1	68,5	69,7	70,7	71,6	72,4	75,6	77,8	79,6	81	83,2	85	88,6	90,3
12	62,2	65,4	67,6	69,3	70,7	71,9	73	73,9	74,7	77,9	80,1	81,8	83,2	85,5	87,2	90,9	92,6

Correction to the weight filter A

w [m/s]	**2**	**3**	**4**	**5**	**6**	**7**	**8**	**9**	**10**	**11**	**12**
K_A [dB]	-15	-11,8	-9,8	-8,4	-7,3	-6,4	-5,7	-5	-4,5	-4	-3,6

Relative level expressing the shape of the spectrum L_{rel}

	f [Hz]							
w [m/s]	**63**	**125**	**250**	**500**	**1000**	**2000**	**4000**	**8000**
2	-4,5	-6,9	-10,9	-16,7	-24,1	-33,2	-43,9	-56,4
3	-3,9	-5,3	-8,4	-13,1	-19,5	-27,6	-37,4	-48,9
4	-3,9	-4,5	-6,9	-10,9	-16,7	-24,1	-33,2	-43,9
5	-4	-4,1	-5,9	-9,4	-14,6	-21,5	-30,0	-40,3
6	-4,2	-3,9	-5,3	-8,4	-13,1	-19,5	-27,6	-37,4
7	-4,5	-3,9	-4,9	-7,5	-11,9	-17,9	-25,7	-35,1
8	-4,9	-3,9	-4,5	-6,9	-10,9	-16,7	-24,1	-33,2
9	-5,2	-3,9	-4,3	-6,4	-10,1	-15,6	-22,7	-31,5
10	-5,5	-4	-4,1	-5,9	-9,4	-14,6	-21,5	-30
11	-5,9	-4,1	-4	-5,6	-8,9	-13,8	-20,4	-28,8
12	-6,2	-4,3	-3,9	-5,3	-8,4	-13,1	-19,5	-27,6

VII. MATERIAL, FINISHING

- Damper casings are made from galvanized sheet metal without further surface treatment.
- Damper blades are made from fire resistant asbestos free boards made of mineral fibres.
- Manual control have cover made of mechanically resistant and durable plastic and the other parts are galvanized without further surface treatment.
- Fusible links are made of sheet brass, thickness 0,5 mm.
- Fasteners and springs are galvanized.
- According to the customer's requirements, dampers can be made of stainless steel material.

  Specifications for stainless-steel design:

  - Class A2 – Food-grade stainless steel (AISI 304 – EN 1.4301)
  - Class A4 – Chemistry-grade stainless steel (AISI 316, 316L – EN 1.4401, EN 1.4404)

  The respective stainless steel is the material for all components that are located or entering the damper inner space; components outside the damper casing are typically from galvanised sheet metal (fasteners for mounting the actuator or manual control, mechanical components except Item 4), frame components.

  The following components, including the fasteners, are made from stainless steel at all times:

  1) Damper casing and all components permanently attached
  2) Blade holders including pins, metal parts of blades
  3) Control components inside the damper (L-profile, pin with lever, rod, fasteners)
  4) Parts of a manual contol entering the inner space of a damper casing (lower sheet of a manual control, lock holder “1”, lock lever “2”, closing spring, 8 dia. stopper pin, manual control pin)
  5) Inspection opening cover including the stirrup and fasteners (if they are parts of the cover)
  6) Bearing for torque transfer from the lever with pin on the blade L-profile (made from AISI 440C)

  The damper blade is made from boards of homogeneous material Promatect-H, connected with galvanized "U" clips on the outside, sealed with Promat K84 glue.

  Fusible link is identical for all material variants of the dampers. Upon specification by customer, the fusible link can be made from A4 from stainless steel sheet metal.

  Thermoelectric activation device BAT is modified for stainless-steel variant of the dampers; standard galvanised screws are replaced with stainless-steel M4 screws of corresponding class. Damper casing has stainless-steel riveting M4 nuts.

  Plastic, rubber and silicon components, sealants, foaming tapes, glass-ceramic seals, housings, brass bearings of the blade, actuators, and end switches are identical for all material variants of the dampers.

  Some fasteners and components are only available in one class of stainless steel; the type will be used in all stainless-steel variants.

  The damper blade in the variant for chemical environments (Class A4) is always treated with a coating of chemically resistant Promat SR.

  Any other requirements for the design will be considered atypical and will be addressed on an individual basis.

VIII. TRANSPORTATION, STORAGE AND WARRANTY

Logistic terms

- Dampers are delivered on pallets. As standard, the dampers are wrapped in plastic foil for protection during transport and must not be used for long-term storage. Temperature changes during transport can cause condensation of water inside the packaging and thereby cause corrosion of materials used in the dampers (e.g. white corrosion on zinc-coated items or mould on calcium silicate). Therefore, it is necessary to remove the transport packaging immediately after unloading to allow air to circulate around the product.
- The dampers must be stored in clean, dry, well ventilated and dust-free environment out of direct sunlight. Ensure protection against moisture and extreme temperatures (minumum temperature +5°C). The dampers must be protected against mechanical and accidental damage prior to installation.
- Another required packaging system should be approved and agreed by manufacturer. Packaging material is not returnable in case that another packaging system (material) is required and used and it is not included into final price of damper.
- Dampers are transported by box freight vehicles without direct weather impact, there must not occur any shocks and ambient temperature must not exceed +50°C. Dampers must be protected against impact when transported and manipulated. During transportation, the damper blade must be in the "CLOSED" position.
- Dampers must be stored indoor in environment without any aggressive vapours, gases or dust. Indoor temperature must be in the range from -30°C to +50°C and maximum relative humidity 95%.

Warranty

- The manufacturer provides a warranty of 24 months from the date of dispatch for the dampers.
- The warranty for fire dampers FDMQ 180, provided by the manufacturer, is completely void if actuating, closing and control devices are unprofessionally handled by untrained workers or if electric components, i.e. limit switches, actuators, communication and supply devices and thermoelectric activation devices are dismounted.
- The warranty is void if dampers are used for other purposes, devices and working conditions than those allowed by these technical conditions or if the dampers are mechanically damaged during handling.
- If the dampers are damaged by transport, a record must be written down with the forwarder at reception for later complaint.

IX. ASSEMBLY, ATTENDANCE AND MAINTENANCE

- Assembly, maintenance and damper function check can be done only by qualified and trained person, i.e. “AUTHORIZED PERSON” according to the manufacturer documentation. All works done on the fire dampers must be done according international and local norms and laws.
- All effective safety standards and directives must be observed during damper assembly.
- To ensure reliable damper function it is necessary to avoid blocking the actuating mechanism and contact surfaces with collected dust, fibre and sticky materials and solvents.
- Flange and screw joints must be conductively connected to protect against dangerous contact. 2 galvanized lock washers that are placed under the head of one screw and a fastened nut are used for conductive connection.

Manual operation - actuator control without electric voltage

- A special wrench (part of the actuator) can be used to manually turn the damper blade to any position. When the wrench is turned in the direction of the arrow, the damper blade rotates to its open position. As the blade rotation is stopped, in every position, the actuator will be locked. Unlocking is possible even manually as per instructions on the actuator, or by the activation of the supply voltage.
- If the actuator is manually locked, the damper blade will not close in the event of a fire after the activation of the thermoelectric activation device BAT. To restore correct damper operation, the actuator must be unlocked (manually or by applying power supply).

Limit switches

- If the damper is equipped with limit switches and these switches are not used during operation (e.g. because of a project change), they can be left on the damper and not connected (they need not be dismounted).
- On the other hand, if the limit switch is to be added to the damper design, the change can be implemented by change kit.
- These facts must be recorded in the respective operation documentation of the damper (record books of the damper, fire logs, etc.) and subsequently, adequate function checks must be carried out.

Installation / fixing the damper

- The damper casing shall not be deformed in the course of bricking in.
- Once the damper is built in, the damper blade shall not grind on the damper casing during opening or closing.

Protection of the damper casing against buckling during installation, especially for large sizes!

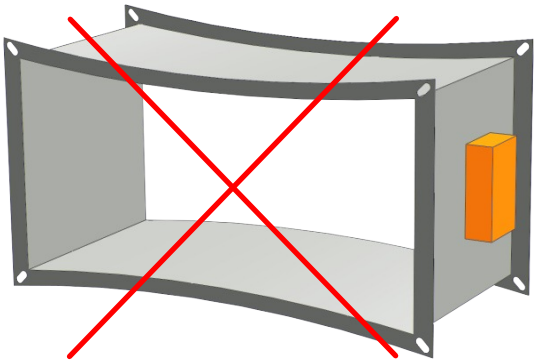

WRONG!

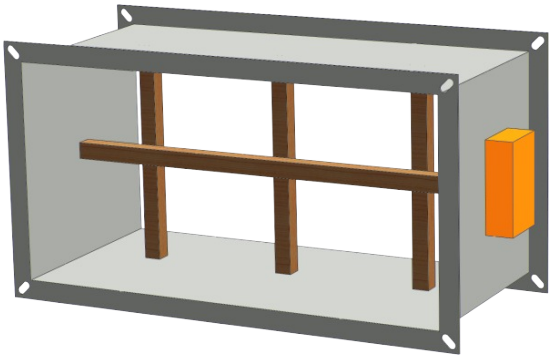

Reinforcement of the casing with wooden beams

Change of manual control for the actuator or vice versa

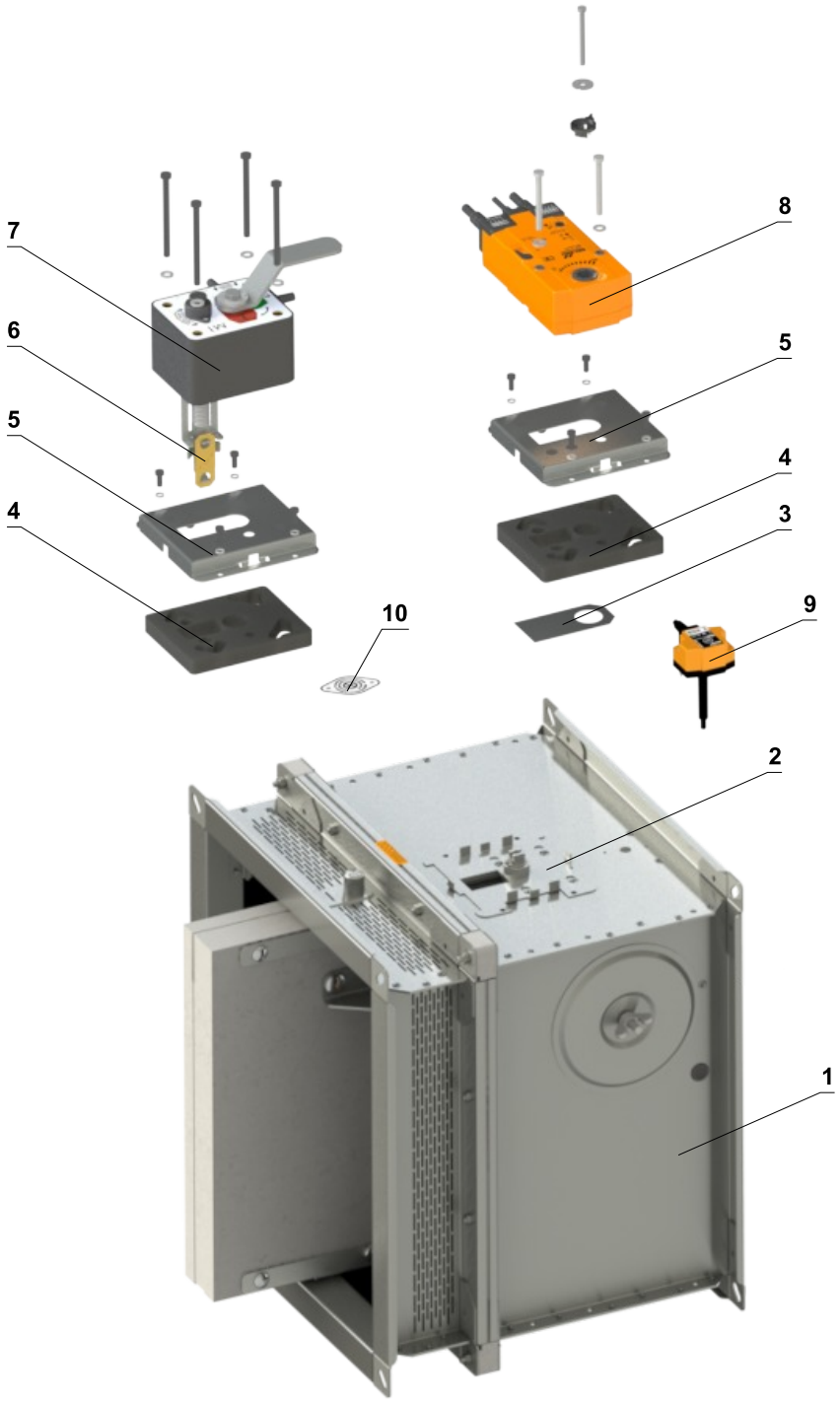

1	Damper	6	Fusible link
2	Mouting plate	7	Manual control
3	Sealing cover	8	Spring return actuator
4	Sealing of a mouting plate	9	Thermoelectric activation device BAT
5	Cover of a mouting plate	10	Sensor sticker

Commissioning and revisions

- Before putting the damper into operation, serviceability checks and functional tests must be carried out including testing of functionality of all electrical elements. After putting into operation these serviceability checks must be carried at least twice a year. If no defect is found during two subsequent serviceability checks, these checks can be carried out once a year.
- In case that dampers are found unable to serve for their function for any cause, it must be clearly marked. The operator is obliged to ensure that the damper is put into condition in which it is ready for function and meanwhile he is obliged to provide the fire protection by another appropriate way.
- Results of regular checks, imperfections found and all-important facts connected with the damper function must be recorded in the "FIRE BOOK" and immediately reported to the operator.
- Before entering the dampers with actuator into operation after their assembly and by sequential checks. Check of blade rotation into the breakdown position "CLOSED" can be done after disconnecting the actuator supply (e.g. by pressing the test button at the thermoelectric activation device BAT or disconnecting the supply from ELECTRICAL FIRE SIGNALISATION). Check of blade rotation back into the "OPEN" position can be done after restoration of power supply (e.g. by releasing the test button or restoration of supply from ELECTRICAL FIRE SIGNALISATION). Without power supply, the damper can be operated manually and fixed in any required position. Release of the locking mechanism can be achieved manually or automatically by applying the supply voltage. It is recommended to provide periodical checks, maintenance and service actions on fire equipment by authorized persons. The authorized persons can be trained by producer, or by authorized distributor. All effective safety standards and directives must be observed during fire damper assembly.
- Visual inspection of proper damper installation, inner area of a damper, damper blade, contact surfaces and silicon seal.
- For regular or exceptional inspection of interior of fire damper, micro-camera device can be used. On each fire damper is an inspection opening. In the case of inspection by camera, take out the black rubber cap, insert the camera inside the damper, check interior and at the end of inspection, put the rubber cap back tightly to cover the empty hole.

For dampers with manual control, following checks must be carried out

Check of a manual control and fusible link

- **To check the function of the manual control proceed as follows:**
- Turn the damper blade to "CLOSED" position as follows:
  - The damper blade is in "OPEN" position.
  - Press the control button of the manual control to turn the damper blade to "CLOSED" position.
  - Check the damper blade rotation to "CLOSED" position.
  - Damper blade closing shall be smooth and fast, the control lever shall be in „CLOSED“ position.
- Turn the damper blade to "OPEN" position as follows:
  - Turn the control lever by 90°.
  - Check the damper blade rotation to "OPEN" position.
  - The lever will automatically lock in "OPEN" position.
- **Check of function and condition of the fusible link:**
  - To check the function and the status of the fuse it's possible to remove the manual control from the casing of the fire damper which is attached to the damper casing with four screws M6.
  - Removing the fusible link from the fuse holder of a manual control, checks its correct functionality.
  - The manual control is identified as M2 to M5, depending on the closing spring strength.

For dampers with actuators, following checks must be carried out

- Check the rotation of the blade to "CLOSED" failure position after disconnection the power supply of the actuator (e.g. by pressing the test button on the thermoelectric activation device BAT or by disconnection the power supply from electrical fire signalization). Check the rotation of the blade back to "OPEN" position by restoring the power supply to the actuator (e.g. by releasing the test button or by restoring the power supply from electrical fire signalization).

Before putting the dampers into operation and during subsequent function checks, the following checks must be carried out for dampers with optical smoke detector

- The function checks of the optical smoke detector are to be carried out by employees of an authorized organization who have corresponding electrotechnical qualification and have been properly trained by the manufacturer. The function checks are to be carried out as a part of function checks of the fire dampers, at least 1x a year.
- For the function checks, the damper blade should be in "CLOSED" position with the fan off or with closed air regulation situated between the fan and the fire damper.

- Inspection opening disassembly
  - Release the covering lid by turning the wing nut and while turning the lid right or left release it from the security belt. Then tilt the lid and remove it from its original position.

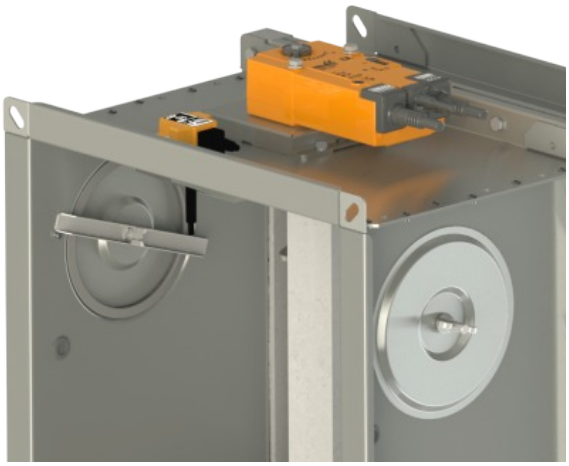

Inspection opening detail

- Ensure each damper is fully checked for operational capability, control should be initiated from the control system or by manual control. Damper blades should open and close correctly and operation should be visually inspected and documented prior to handover.

How to proceed after Tf1 or Tf2 fuses have been activated

- If the fusible link **Tf1** is interrupted (due to temperature outside the duct), it is necessary to replace the spring return actuator. → see page 10
- If the fusible link **Tf2** is interrupted (due to temperature inside the duct) , only the spare part ZBAT 72 (95/120/140) needs to be replaced (acc.to the activation temperature). → see page 10

X. ORDERING INFORMATIONS

Ordering key

1	2	3		4	5	6	7		8	9	10
FDMQ 180	EN	500x250	/	375	.40	120	Q30	-	ZN	IW	G

EXAMPLES:

FDMQ 180 EN 500x250/375 .40 Q30-ZN

Fire damper FDMQ 180, dimension 500x250 mm, built length 375 mm, control design with spring return actuator AC 230 V, standard activation temperature 72 °C, flange dimension 30 mm, galvanized material variant, without installation kit/frame, standard silicon seal.

FDMQ 180 EN 500x250/375 .40 120 Q30-ZN IW G

Fire damper FDMQ 180, dimension 500x250 mm, built length 375 mm, control design with spring return actuator AC 230 V, activation temperature 120 °C, flange dimension 30 mm, galvanized material variant, impregnation against humidity, rubber cold seal.

1| Fire damper type - FDMQ 180

2| Country of destination

3| Damper dimensions A x B → see pages 16 to 20

"A" is the width of the damper

"B" is the height of the damper

4| Built length - 375 mm

5| Damper design

.01	Manual control and thermal
.11	Manual control and thermal with a terminal switch („CLOSED“)
.80	Manual control and thermal with two terminal switches („OPEN“, „CLOSED“)
.40	With actuator BF 230-TN (BFL, BFN 230-T) - voltage AC 230 V
.41	With actuator BF 24-TN (BFL, BFN 24-T), with smoke detector ORS 142 K and with supply device BKN 230-24-MOD (voltage AC 230 V)
.50	With actuator BF 24-TN (BFL, BFN 24-T) - voltage AC/DC 24 V
.51	With actuator BF 24-TN (BFL, BFN 24-T), with smoke detector ORS 142 K (voltage AC/DC 24 V)
.63	With communication and supply device BKN 230-24-MOD, with actuator BF 24-TN-ST (BFL, BFN 24-T-ST)
.63S	With communication and supply device BKN 230-24-MOD, with actuator BF 24-TN-ST (BFL, BFN 24-T-ST) and with smoke detector ORS 142 K

6| Activation temperature

Manual control		Spring return actuator control	
	72 °C *		72 °C *
104	104 °C	95	95 °C
147	147 °C	120	120 °C
		140	140 °C

** Standard activation temperature*

7| Flange dimension

Q30	Flange width 30 mm
Q20	Flange width 20 mm

8| Material and other design options

ZN	Galvanized
A2	Stainless steel 1.4301 (AISI 304)
A4	Stainless steel 1.4404 (AISI 316L) - included damper blade impregnation against chemical - type PROMAT SR

9|Surface treatment

	Without surface treatment
IW	Damper blade impregnation, impregnating agent PROMAT 2000 - impregnation against humidity
IA	Damper blade impregnation, impregnating agent PROMAT SR - impregnation against chemical

10| Cold seal variant

	Silicone rubber *
G	Silicone-free rubber

** Standard cold seal*

Data label

- Data label is placed on the damper casing (example)

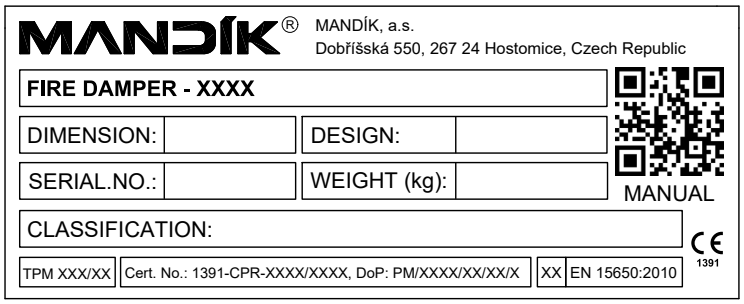

The producer reserves the right for innovations of the product.
For actual product information see www.mandik.com

MANDÍK®

www.mandik.com

MANDÍK, a.s. • Dobříšská 550 • 267 24 Hostomice • Czech Republic • Tel.: +420 311 706 742 • E-Mail: mandik@mandik.cz